Message Specification

VOLVO GLOBAL INVOIC D07A (AP)

Based on:

INVOIC
Invoice message

UN D.07A S3; JAIF; 2012

Version: 1
Variant: 1
Issue date: 2026-10-20
Author: Volvo Group IT

Message Structure

Counter	No	Tag	St	MaxOcc	Level	Content
0010	1	**UNH**	M	1	0	Message header
0020	2	**BGM**	M	1	0	Beginning of message
0030	3	**DTM**	M	1	1	Message date
0030	4	**DTM**	D	1	1	Tax point date or period
0030	5	**DTM**	D	1	1	Horizon start date
0030	6	**DTM**	D	1	1	Horizon end date
0070	7	**FTX**	D	3	1	Legal info free text
0070	8	**FTX**	D	1	1	Payment instructions free text
0090	9	**GEI**	R	1	1	Processing indicator
0120		**SG1**	D	1	1	Other Reference
0130	10	**RFF**	M	1	1	Application reference number
0120		**SG1**	D	1	1	Other Reference
0130	11	**RFF**	M	1	1	Invoice document identifier
0220		**SG2**	R	1	1	Buyer
0230	12	**NAD**	M	1	1	Buyer's Name and Address
0270		**SG3**	D	5	2	Buyer's reference number(s)
0280	13	**RFF**	M	1	2	Buyer's reference number(s)
0220		**SG2**	D	1	1	Buyer as officially registered
0230	14	**NAD**	M	1	1	Buyer as officially registered
0220		**SG2**	D	1	1	Invoicee
0230	15	**NAD**	M	1	1	Invoicee's Name and Address
0270		**SG3**	D	5	2	Invoicee's reference number(s)
0280	16	**RFF**	M	1	2	Invoicee's reference number(s)
0220		**SG2**	R	1	1	Ship-to
0230	17	**NAD**	M	1	1	Ship-to's Name and Address
0270		**SG3**	D	5	2	Ship-to's reference number(s)
0280	18	**RFF**	M	1	2	Ship-to's reference number(s)
0220		**SG2**	D	1	1	Buyer's Tax representative party
0230	19	**NAD**	M	1	1	Buyer's Tax representative
0270		**SG3**	D	1	2	VAT registration number
0280	20	**RFF**	M	1	2	VAT registration number
0220		**SG2**	R	1	1	Seller
0230	21	**NAD**	M	1	1	Seller's Name and Address
0270		**SG3**	D	5	2	Seller's reference number(s)
0280	22	**RFF**	M	1	2	Seller's reference number(s)
0220		**SG2**	D	1	1	Seller as officially registered
0230	23	**NAD**	M	1	1	Seller as officially registered
0220		**SG2**	D	1	1	Payee

Counter = Counter of segment/group within the standard
No = Consecutive segment number
MaxOcc = Maximum occurrence of the segment/group

St = Status
EDIFACT: M=Mandatory, C=Conditional
User specific: R=Required, O=Optional, D=Dependent, A=Advised, N=Not used

Counter	No	Tag	St	MaxOcc	Level	Content
0230	24	**NAD**	M	1	1	Payee's Name and Address
0250	25	**FII**	R	1	2	Pay-to's financial institution
0270		**SG3**	D	5	2	Payee's reference number(s)
0280	26	**RFF**	M	1	2	Payee's reference number(s)
0220		**SG2**	D	1	1	Ship-from
0230	27	**NAD**	M	1	1	Ship-from's Name and Address
0270		**SG3**	D	5	2	Ship-from's reference number(s)
0280	28	**RFF**	M	1	2	Ship-from's reference number(s)
0220		**SG2**	D	1	1	Invoice issuer
0230	29	**NAD**	M	1	1	Invoice issuer's Name and Address
0270		**SG3**	D	5	2	Invoice issuer's reference number(s)
0280	30	**RFF**	M	1	2	Invoice issuer's reference number(s)
0220		**SG2**	D	1	1	Seller's Tax representative party
0230	31	**NAD**	M	1	1	Seller's Tax representative
0270		**SG3**	D	1	2	VAT registration number
0280	32	**RFF**	M	1	2	VAT registration number
0400		**SG7**	R	1	1	Invoice and home currency
0410	33	**CUX**	M	1	1	Currencies
0420	34	**DTM**	D	1	2	Exchange rate date
0430		**SG8**	D	10	1	Payment instructions
0440	35	**PYT**	M	1	1	Payment terms
0450	36	**DTM**	O	1	2	Payment due date
0450	37	**DTM**	O	1	2	Reference date/time
0500		**SG9**	D	10	1	Transport details
0510	38	**TDT**	M	1	1	Transport information
0530		**SG10**	D	10	2	LOC
0540	39	**LOC**	M	1	2	Place/location identification
1090		**SG26**	R	9999999	1	Line item section
1100	40	**LIN**	M	1	1	Line item
1110	41	**PIA**	D	1	2	Additional article identifier
1130	42	**IMD**	D	1	2	Description of article or service
1150	43	**QTY**	R	1	2	Invoiced quantity
1150	44	**QTY**	D	2	2	Other quantities
1170	45	**ALI**	M	1	2	Additional information
1180	46	**DTM**	D	1	2	Goods receipt date
1190	47	**GIN**	D	1000	2	Goods identity number
1250		**SG27**	R	1	2	Line item gross amount
1260	48	**MOA**	M	1	2	Line item gross amount in invoice currency
1330		**SG29**	R	1	2	Calculation gross price
1340	49	**PRI**	M	1	2	Price details

Counter = Counter of segment/group within the standard
No = Consecutive segment number
MaxOcc = Maximum occurrence of the segment/group

St = Status
EDIFACT: M=Mandatory, C=Conditional
User specific: R=Required, O=Optional, D=Dependent, A=Advised, N=Not used

Counter	No	Tag	St	MaxOcc	Level	Content
1390		**SG30**	R	6	2	References to messages
1400	50	**RFF**	M	1	2	Reference message number
1410	51	**DTM**	D	1	3	Reference message date
1550		**SG34**	D	5	2	VAT or other tax rate and amount for line item
1560	52	**TAX**	M	1	2	VAT or other tax rate line item
1570	53	**MOA**	R	1	3	VAT or other tax amount line item
1720		**SG39**	D	10	2	Charges
1730	54	**ALC**	M	1	2	Charge
1760	55	**FTX**	D	1	3	Charge description
1830		**SG42**	R	1	3	Charge - monetary amount
1840	56	**MOA**	M	1	3	Charge - monetary amount
1910		**SG44**	D	5	3	Charge - applicable Tax rate and amount
1920	57	**TAX**	M	1	3	Charge - applicable tax rate
1930	58	**MOA**	R	1	4	Charge - applicable VAT amount
1990		**SG47**	R	1	2	Terms of delivery
2000	59	**TOD**	M	1	2	Terms of delivery - incoterms
2010	60	**LOC**	R	1	3	Place/location identification
2180	61	**UNS**	M	1	0	Section control
2200		**SG50**	M	1	1	Total invoice amount in invoicing currency
2210	62	**MOA**	M	1	1	Invoice amount in invoicing currency
2200		**SG50**	D	1	1	Total invoice amount in home currency
2210	63	**MOA**	M	1	1	Invoice amount in home currency
2200		**SG50**	D	1	1	Total taxable amount in invoicing currency
2210	64	**MOA**	M	1	1	Total taxable amount in invoicing currency
2200		**SG50**	D	1	1	Total taxable amount in home currency
2210	65	**MOA**	M	1	1	Total taxable amount in home currency
2200		**SG50**	D	1	1	Total tax amount in invoicing currency
2210	66	**MOA**	M	1	1	Total tax amount in invoicing currency
2200		**SG50**	D	1	1	Total tax amount in home currency
2210	67	**MOA**	M	1	1	Total tax amount in home currency
2200		**SG50**	R	1	1	Total line items amount in invoicing currency
2210	68	**MOA**	M	1	1	Total line items amount in invoicing currency
2200		**SG50**	D	1	1	Total invoice additional amount in invoicing currency
2210	69	**MOA**	M	1	1	Total invoice additional amount in invoicing currency
2200		**SG50**	D	1	1	Total invoice adjustment amount in invoicing currency
2210	70	**MOA**	M	1	1	Total invoice adjustment amount in invoicing currency
2200		**SG50**	D	2	1	Total non-taxable/exemption amount
2210	71	**MOA**	M	1	1	Non-taxable or exemption amount
2250		**SG52**	D	10	1	Tax rates and amounts
2260	72	**TAX**	M	1	1	Tax type

Counter = Counter of segment/group within the standard
No = Consecutive segment number
MaxOcc = Maximum occurrence of the segment/group

St = Status
EDIFACT: M=Mandatory, C=Conditional
User specific: R=Required, O=Optional, D=Dependent, A=Advised, N=Not used

Counter	No	Tag	St	MaxOcc	Level	Content
2270	73	**MOA**	R	1	2	Tax amount in invoice currency
2270	74	**MOA**	R	1	2	Taxable amount in invoice currency
2330	75	**UNT**	M	1	0	Message trailer

Counter = Counter of segment/group within the standard
No = Consecutive segment number
MaxOcc = Maximum occurrence of the segment/group

St = Status
EDIFACT: M=Mandatory, C=Conditional
User specific: R=Required, O=Optional, D=Dependent, A=Advised, N=Not used

Branching Diagram of Used Segments/Groups

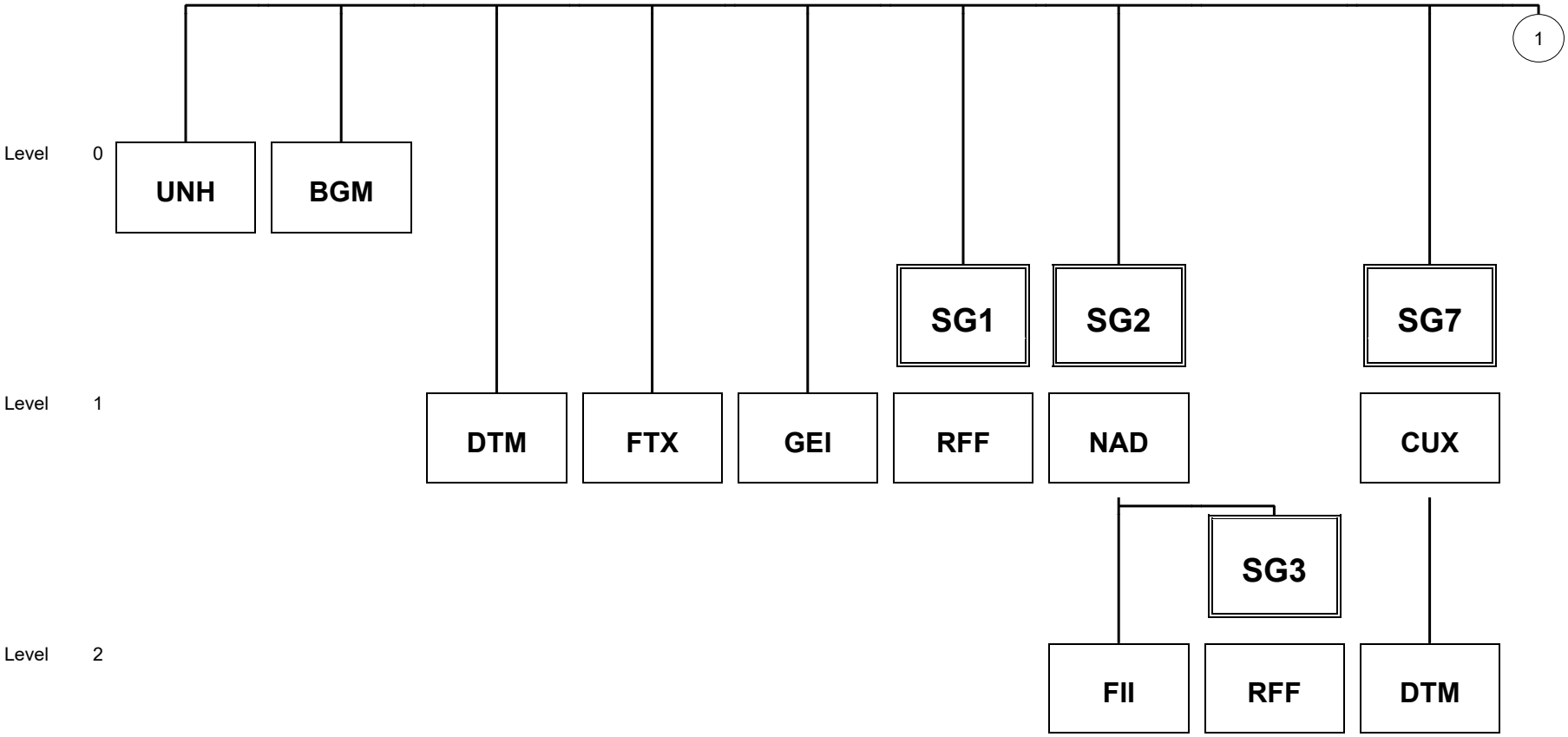

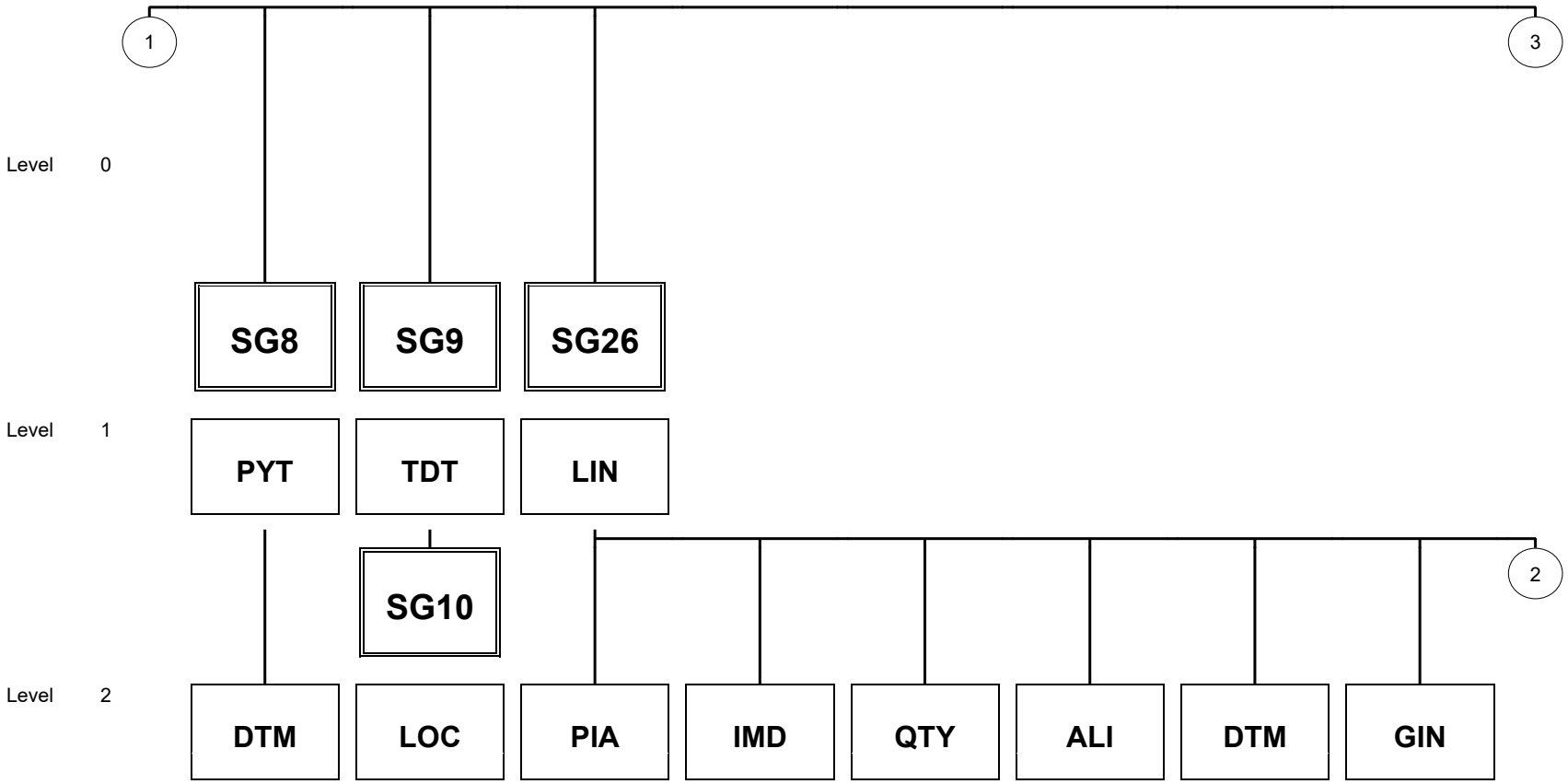
1
3
Level 0
SG8
SG9
SG26
Level 1
PYT
TDT
LIN
SG10
2
Level 2
DTM
LOC
PIA
IMD
QTY
ALI
DTM
GIN

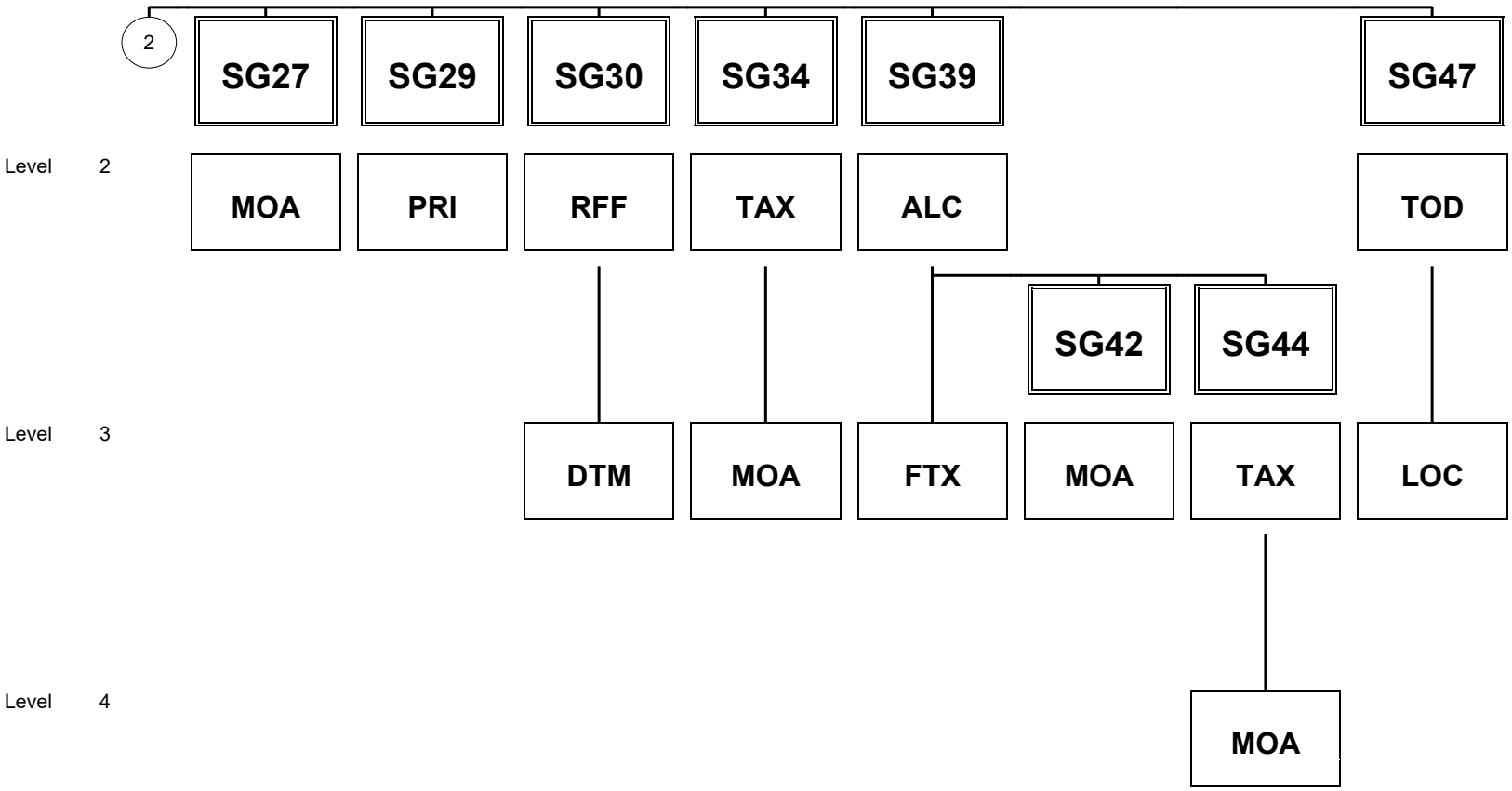
2
SG27
SG29
SG30
SG34
SG39
SG47
Level 2
MOA
PRI
RFF
TAX
ALC
TOD
SG42
SG44
Level 3
DTM
MOA
FTX
MOA
TAX
LOC
Level 4
MOA

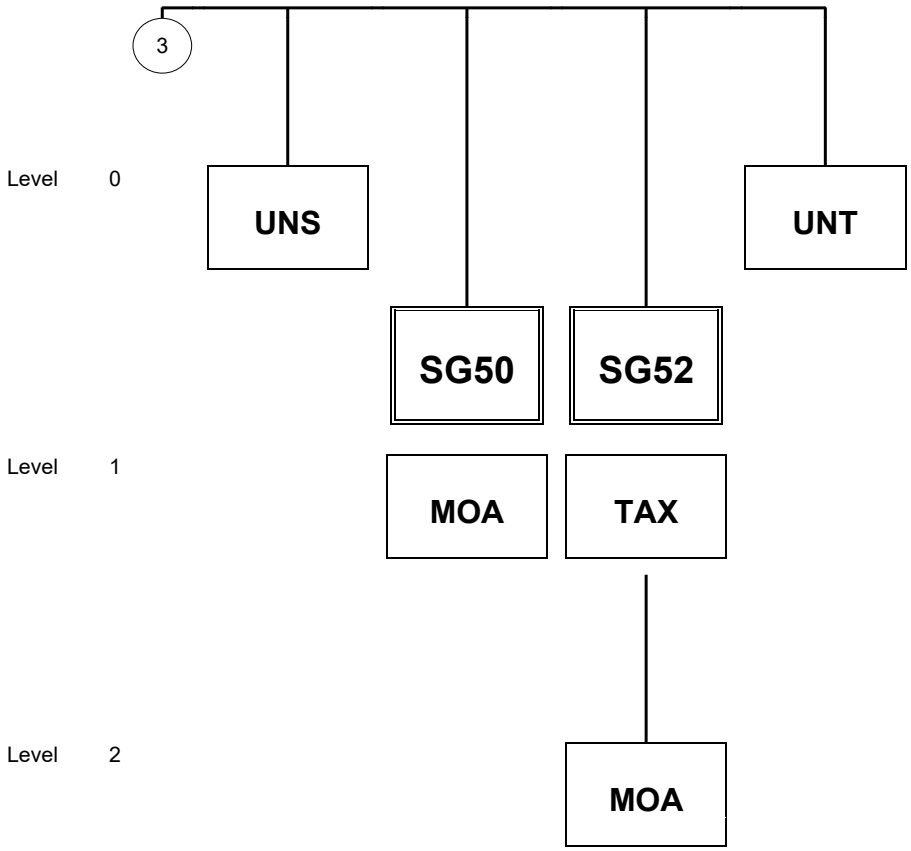
3
Level 0
UNS
UNT
SG50
SG52
Level 1
MOA
TAX
Level 2
MOA

Segment: **UNH** Seq. No.: 1 Level: 0 **Message header**
Status: M Max. Occ.: 1
Counter: 0010

Name: **Message header**

UN/EDIFACT				Implementation			
	Name	St	Format	St	Format	Use / Remarks	
UNH							
0062	Message reference number	M	an..14	M	an..14	Message reference number - unique number to identify the message within the interchange, usually a consecutive number starting with 1.	
S009	Message identifier	M		M			
0065	Message type	M	an..6	M	an..6	**INVOIC**	**Invoice message**
0052	Message version number	M	an..3	M	an..3	**D**	**Draft version/UN/EDIFACT Directory**
0054	Message release number	M	an..3	M	an..3	**07A**	**Release 2007 - A**
0051	Controlling agency	M	an..2	M	an..2	**UN**	**UN/CEFACT**
0057	Association assigned code	C	an..6	R	an..6	**GBSI11**	**Volvo Group INVOIC D07A AP (2014 version)** Identification of the subset release, assigned by the responsible organisation (Odette resp. Joint Automotive Initiative Forum).

Remark:

Example:

```
UNH+1+INVOIC:D:07A:UN:GBSI11'
```

Segment: **BGM** Seq. No.: 2 Level: 0 **Beginning of message**
Status: M Max. Occ.: 1
Counter: 0020

Name: **Beginning of message**

UN/EDIFACT				Implementation		
	Name	St	Format	St	Format	Use / Remarks
BGM						
C002	Document/message name	C		R		
1001	Document name code	C	an..3	R	an..3	Code specifying the type or subtype of the business document. The following explanations are intended to support a unique usage of the different message types: **380 Commercial invoice** **381 Credit note** **389 Self-billed invoice**
1131	Code list identification code	C	an..17	N		not used
3055	Code list responsible agency code	C	an..3	N		not used
1000	Document name	C	an..35	N		not used
C106	Document/message identification	C		R		
1004	Document identifier	C	an..35	R	an..16	Document number

Remark:
Use BGM.1001 code 381 & 389 only after agreement between concerned parties.

Example:
```
BGM+380+123456'
```

Segment: **DTM**

Seq. No.: 3 Level: 1 **Date/time/period**
Status: M Max. Occ.: 1
Counter: 0030

Name: **Message date**

UN/EDIFACT				Implementation		
	Name	St	Format	St	Format	Use / Remarks
DTM						
C507	Date/time/period	M		M		
2005	Date or time or period function code qualifier	M	an..3	M	an..3	The message date/invoice date. **137 Document issue date time**
2380	Date or time or period text	C	an..35	R	n..12	Date, on which a document or business signal was issued. Required in the EU Invoice directive.
2379	Date or time or period format code	C	an..3	R	an..3	**102 CCYYMMDD** **203 CCYYMMDDHHMM**

Remark:

Example:

```
DTM+137:20041231:102'
```

Segment: **DTM**

Seq. No.: 4 Level: 1 **Date/time/period**
Status: D Max. Occ.: 1
Counter: 0030

Name: **Tax point date or period**

UN/EDIFACT				Implementation		
	Name	St	Format	St	Format	Use / Remarks
DTM						
C507	Date/time/period	M		M		
2005	Date or time or period function code qualifier	M	an..3	M	an..3	**131** **Tax point date time**
2380	Date or time or period text	C	an..35	R	n..17	Tax Point Date or Period. Date relevant for taxation purposes. May differ from the document issue date.
2379	Date or time or period format code	C	an..3	R	an..3	**102** **CCYYMMDD** **203** **CCYYMMDDHHMM** **711** **CCYYMMDD-CCYYMMDD**

Remark:

If the message/invoice date (DTM+137) is also synonymous with the Tax Point date; the tax point date does not have to be declared separately - only where the invoice date and the tax point dates are different, does the latter have to be explicitly declared.

Example:

```
DTM+131:20041231:102'
```

Segment: **DTM**

Seq. No.: 5 Level: 1 **Date/time/period**
Status: D Max. Occ.: 1
Counter: 0030

Name: **Horizon start date**

UN/EDIFACT				Implementation			
	Name	St	Format	St	Format	Use / Remarks	
DTM							
C507	Date/time/period	M		M			
2005	Date or time or period function code qualifier	M	an..3	M	an..3	**158**	**Horizon start date**
2380	Date or time or period text	C	an..35	R	n..12	Start date of a given period	
2379	Date or time or period format code	C	an..3	R	an..3	**102** **203**	**CCYYMMDD** **CCYYMMDDHHMM**

Remark:
This segment is only to be used in the Self-billed invoice process (i.e. if BGM.1001=389).

Example:
```
DTM+158:20041201:102'
```

Segment: **DTM**

Seq. No.: 6 Level: 1 **Date/time/period**
Status: D Max. Occ.: 1
Counter: 0030

Name: **Horizon end date**

UN/EDIFACT				Implementation		
	Name	St	Format	St	Format	Use / Remarks
DTM						
C507	Date/time/period	M		M		
2005	Date or time or period function code qualifier	M	an..3	M	an..3	**159** **Horizon end date**
2380	Date or time or period text	C	an..35	R	n..12	End date of a given period
2379	Date or time or period format code	C	an..3	R	an..3	**102** **CCYYMMDD** **203** **CCYYMMDDHHMM**

Remark:
This segment is only to be used in the Self-billed invoice process (i.e. if BGM.1001=389).

Example:
```
DTM+159:20041231:102'
```

Segment: **FTX** Seq. No.: 7 Level: 1 **Free text**
Status: D Max. Occ.: 3
Counter: 0070

Name: **Legal info free text**

UN/EDIFACT				Implementation		
	Name	St	Format	St	Format	Use / Remarks
FTX						
4451	Text subject code qualifier	M	an..3	M	an..3	Free Text Qualifier **ABL** **Government information** **REG** **Regulatory information** **TXD** **Tax declaration**
4453	Free text function code	C	an..3	N		not used
C107	Text reference	C		N		not used
4441	Free text description code	M	an..17	N		not used
C108	Text literal	C		R		
4440	Free text	M	an..512	M	an..256	A line of plain, non-structured text information.
4440	Free text	C	an..512	D	an..256	see 4440 #1
4440	Free text	C	an..512	D	an..256	see 4440 #1
4440	Free text	C	an..512	N		not used
4440	Free text	C	an..512	N		not used
3453	Language name code	C	an..3	R	a..2	Code specifying the language name. Use ISO 639-1988.

Remark:
Free text containing information or statements as required by legal environment.

Example:
```
FTX+ABL+++LEGAL INFO TEXT+EN'
```

Segment: **FTX** Seq. No.: 8 Level: 1 **Free text**
Status: D Max. Occ.: 1
Counter: 0070

Name: **Payment instructions free text**

UN/EDIFACT				Implementation		
	Name	St	Format	St	Format	Use / Remarks
FTX						
4451	Text subject code qualifier	M	an..3	M	an..3	Free Text Qualifier **AAB** **Payment term**
4453	Free text function code	C	an..3	N		not used
C107	Text reference	C		N		not used
4441	Free text description code	M	an..17	N		not used
C108	Text literal	C		R		
4440	Free text	M	an..512	M	an..256	A line of plain, non-structured text information. Text/Description in English only.
4440	Free text	C	an..512	N		not used
4440	Free text	C	an..512	N		not used
4440	Free text	C	an..512	N		not used
4440	Free text	C	an..512	N		not used
3453	Language name code	C	an..3	R	a..2	Code specifying the language name. Use ISO 639-1988.

Remark:
This segment is only to be used in the Self-billed invoice process (i.e. if BGM.1001=389).

Example:
```
FTX+AAB+++PAYMENT TEXT+EN'
```

Segment: **GEI** Seq. No.: 9 Level: 1 **Processing information**
Status: R Max. Occ.: 1
Counter: 0090

Name: **Processing indicator**

UN/EDIFACT				Implementation		
	Name	St	Format	St	Format	Use / Remarks
GEI						
9649	Processing information code qualifier	M	an..3	M	an..3	Used to categorize the invoicing domain (production materials). **PM** **Production material** Codes have been defined by GIP in JAI013 code list - to be used with code 272 in GEI.3055.
C012	Processing indicator	C		O		
7365	Processing indicator description code	C	an..3	N		not used
1131	Code list identification code	C	an..17	N		not used
3055	Code list responsible agency code	C	an..3	R	an..3	**272** **Joint Automotive Industry agency**

Remark:

This segment shall be used to identify the type of products/services that are being invoiced, in this case PM = production material (also called AP = Automotive products).

Example:

```
GEI+PM+::272'
```

Group: **SG1** Status: D Max. Occ.: 1 Other Reference

Segment: **RFF** Seq. No.: 10 Level: 1 **Reference**
Status: M Max. Occ.: 1
Counter: 0130

Name: **Application reference number**

UN/EDIFACT				Implementation		
	Name	St	Format	St	Format	Use / Remarks
RFF						
C506	Reference	M		M		
1153	Reference code qualifier	M	an..3	M	an..3	**AGK Application reference number**
1154	Reference identifier	C	an..70	R	an..70	Unique identifier of a document (Document number or Reference number).

Remark:
This segment is only to be used in the Self-billed invoice process (i.e. if BGM.1001=389).

Example:
```
RFF+AGK:123'
```

Group: SG1 Status: D Max. Occ.: 1 Other Reference

Segment: RFF Seq. No.: 11 Level: 1 **Reference**
Status: M Max. Occ.: 1
Counter: 0130

Name: **Invoice document identifier**

UN/EDIFACT				Implementation		
	Name	St	Format	St	Format	Use / Remarks
RFF						
C506	Reference	M		M		
1153	Reference code qualifier	M	an..3	M	an..3	**IV** **Invoice document identifier**
1154	Reference identifier	C	an..70	R	an..16	Reference to previous invoice.

Remark:
Qualifier IV should be used if BGM.1001 = 381.
Use this segment to reference the previous invoice that shall be credited.

Example:
```
RFF+IV:123ABC'
```

Group: **SG2** Status: R Max. Occ.: 1 Buyer

Segment: **NAD** Seq. No.: 12 Level: 1 **Name and address**
Status: M Max. Occ.: 1
Counter: 0230

Name: **Buyer's Name and Address**

UN/EDIFACT				Implementation		
	Name	St	Format	St	Format	Use / Remarks
NAD						
3035	Party function code qualifier	M	an..3	M	an..3	**BY** **Buyer**
C082	Party identification details	C		R		
3039	Party identifier	M	an..35	M	an..35	Buyer ID
1131	Code list identification code	C	an..17	N		not used
3055	Code list responsible agency code	C	an..3	R	an..3	**92** **Assigned by buyer or buyer's agent**
C058	Name and address	C		N		not used
3124	Name and address description	M	an..35	N		not used
C080	Party name	C		R		
3036	Party name	M	an..35	M	an..35	Single text line for specification of a name.
3036	Party name	C	an..35	O	an..35	c/o address (when applicable)
C059	Street	C		D		
3042	Street and number or post office box identifier	M	an..35	M	an..35	The name that identifies the location of a house or building; usually within a street as part of an address.
3042	Street and number or post office box identifier	C	an..35	O	an..35	see 3042 # 1
3164	City name	C	an..35	R	an..35	The name of the city, town, or village of this address.
C819	Country subdivision details	C		O		
3229	Country subdivision identifier	C	an..9	O	an..9	State or region within a country. The use of UN LoCodes is recommended.
3251	Postal identification code	C	an..17	R	an..17	Postal code/Zip code
3207	Country identifier	C	an..3	R	a..2	Provides the country part of an address using a code. Use ISO3166 two alpha code.

Remark:
Party to whom product, merchandise and/or service is sold.

Example:
```
NAD+BY+1002::92++VOLVO PARTS CORPORATION++GOTEBORG++405 08+SE'
```

Group: SG2 Status: R Max. Occ.: 1 Buyer

Group: SG3 Status: D Max. Occ.: 5 Buyer's reference number(s)

To be used when legally required and/or in agreement between concerned parties.

Segment: RFF Seq. No.: 13 Level: 2 **Reference**
Status: M Max. Occ.: 1
Counter: 0280

Name: **Buyer's reference number(s)**

UN/EDIFACT				Implementation		
	Name	St	Format	St	Format	Use / Remarks
RFF						
C506	Reference	M		M		
1153	Reference code qualifier	M	an..3	M	an..3	**AHP** **Tax registration number** **FC** **Fiscal number** **VA** **VAT registration number** **XA** **Company/place registration number**
1154	Reference identifier	C	an..70	R	an..17	AHP: The registration number by which a company/organization is identified with the tax administration. FC: Tax payer's number. Number assigned to individual persons as well as to corporates by a public institution; this number is different from the VAT registration number. VA: Unique number assigned by the relevant tax authority to identify a party for use in relation to Value Added Tax (VAT). XA: Company and Place as legally required.

Remark:
VAT registration number (VA in RFF.1153) is required in the EU invoice directive.

Example:
```
RFF+VA:SE556365974601'
```

Group: **SG2** Status: D Max. Occ.: 1 Buyer as officially registered

To be used when legally required and/or in agreement between concerned parties.

Segment: **NAD** Seq. No.: 14 Level: 1 **Name and address**
Status: M Max. Occ.: 1
Counter: 0230

Name: **Buyer as officially registered**

UN/EDIFACT				Implementation		
	Name	St	Format	St	Format	Use / Remarks
NAD						
3035	Party function code qualifier	M	an..3	M	an..3	**FG** **Buyer as officially registered**
C082	Party identification details	C		N		not used
3039	Party identifier	M	an..35	N		not used
C058	Name and address	C		R		
3124	Name and address description	M	an..35	M	an..35	A text line containing non-structured name and address information.
3124	Name and address description	C	an..35	O	an..35	see 3124 #1
3124	Name and address description	C	an..35	O	an..35	see 3124 #1
3124	Name and address description	C	an..35	O	an..35	see 3124 #1
3124	Name and address description	C	an..35	O	an..35	see 3124 #1

Remark:
Address information if required (and as registered) by legal environment.

Example:
```
NAD+FG++BUYER LTD.:SAMPLE STREET 12:55300 SAMPLE TOWN:SE'
```

Group: **SG2** Status: D Max. Occ.: 1 Invoicee

Segment: **NAD** Seq. No.: 15 Level: 1 **Name and address**
Status: M Max. Occ.: 1
Counter: 0230

Name: **Invoicee's Name and Address**

UN/EDIFACT				Implementation		
	Name	St	Format	St	Format	Use / Remarks
NAD						
3035	Party function code qualifier	M	an..3	M	an..3	**IV** **Invoicee**
C082	Party identification details	C		O		
3039	Party identifier	M	an..35	M	an..35	Invoice recipient ID
1131	Code list identification code	C	an..17	N		not used
3055	Code list responsible agency code	C	an..3	R	an..3	**92** **Assigned by buyer or buyer's agent**
C058	Name and address	C		N		not used
3124	Name and address description	M	an..35	N		not used
3124	Name and address description	C	an..35	N		not used
3124	Name and address description	C	an..35	N		not used
3124	Name and address description	C	an..35	N		not used
3124	Name and address description	C	an..35	N		not used
C080	Party name	C		R		
3036	Party name	M	an..35	M	an..35	Single text line for specification of a name.
3036	Party name	C	an..35	O	an..35	c/o address (when applicable)
C059	Street	C		D		
3042	Street and number or post office box identifier	M	an..35	M	an..35	The name that identifies the location of a house or building; usually within a street as part of an address.
3042	Street and number or post office box identifier	C	an..35	O	an..35	see 3042 #1
3164	City name	C	an..35	R	an..35	The name of the city, town, or village of this address.
C819	Country subdivision details	C		O		
3229	Country subdivision identifier	C	an..9	O	an..9	State or region within a country. The use of UN LoCodes is recommended.
3251	Postal identification code	C	an..17	R	an..17	Postal code/Zip code
3207	Country identifier	C	an..3	R	a..2	Provides the country part of an address using a code. Use ISO3166 two alpha code.

Remark:

Party to whom the invoice is issued on behalf of the buyer. The buyer and the Invoicee are not the same legal entity.

This party should be used if the buyer is not paying the invoice and only in agreement with Volvo.

Example:

```
NAD+IV+1002::92++VOLVO PARTS CORPORATION:C/O VOLVO GROUP BUSINESS
SERVICES++GOTEBORG++405 08+SE'
```

Group: SG2 Status: D Max. Occ.: 1 Invoicee

Group: SG3 Status: D Max. Occ.: 5 Invoicee's reference number(s)

To be used when legally required and/or in agreement between concerned parties.

Segment: **RFF** Seq. No.: 16 Level: 2 **Reference**
Status: M Max. Occ.: 1
Counter: 0280

Name: **Invoicee's reference number(s)**

UN/EDIFACT				Implementation		
	Name	St	Format	St	Format	Use / Remarks
RFF						
C506	Reference	M		M		
1153	Reference code qualifier	M	an..3	M	an..3	**AHP** **Tax registration number** **FC** **Fiscal number** **VA** **VAT registration number** **XA** **Company/place registration number**
1154	Reference identifier	C	an..70	R	an..17	AHP: The registration number by which a company/organization is identified with the tax administration. FC: Tax payer's number. Number assigned to individual persons as well as to corporates by a public institution; this number is different from the VAT registration number. VA: Unique number assigned by the relevant tax authority to identify a party for use in relation to Value Added Tax (VAT). XA: Company and Place as legally required.

Remark:
VAT registration number (VA in RFF.1153).

Example:
```
RFF+VA:SE556365974601'
```

Group: **SG2** Status: R Max. Occ.: 1 Ship-to

Segment: **NAD** Seq. No.: 17 Level: 1 **Name and address**
Status: M Max. Occ.: 1
Counter: 0230

Name: **Ship-to's Name and Address**

UN/EDIFACT				Implementation		
	Name	St	Format	St	Format	Use / Remarks
NAD						
3035	Party function code qualifier	M	an..3	M	an..3	**ST** **Ship to**
C082	Party identification details	C		R		
3039	Party identifier	M	an..35	M	an..35	Ship-to ID
1131	Code list identification code	C	an..17	N		not used
3055	Code list responsible agency code	C	an..3	R	an..3	**92** **Assigned by buyer or buyer's agent**
C058	Name and address	C		N		not used
3124	Name and address description	M	an..35	N		not used
C080	Party name	C		R		
3036	Party name	M	an..35	M	an..35	Single text line for specification of a name.
3036	Party name	C	an..35	O	an..35	c/o address (when applicable)
C059	Street	C		D		
3042	Street and number or post office box identifier	M	an..35	M	an..35	The name that identifies the location of a house or building; usually within a street as part of an address.
3042	Street and number or post office box identifier	C	an..35	O	an..35	see 3042 #1
3164	City name	C	an..35	D	an..35	The name of the city, town, or village of this address.
C819	Country subdivision details	C		O		
3229	Country subdivision identifier	C	an..9	D	an..9	State or region within a country. The use of UN LoCodes is recommended.
3251	Postal identification code	C	an..17	D	an..17	Postal code/Zip code
3207	Country identifier	C	an..3	R	a..2	Provides the country part of an address using a code. Use ISO3166 two alpha code.

Remark:
The party to which goods have been shipped (consigned).

Example:
```
NAD+ST+12345::92++SHIP-TO NAME+SHIP-TO STREET AND NUMBER+CITY+SE-O+10369+SE'
```

Group: **SG2** Status: R Max. Occ.: 1 Ship-to

Group: **SG3** Status: D Max. Occ.: 5 Ship-to's reference number(s)

To be used when legally required and/or in agreement between concerned parties.

Segment: **RFF** Seq. No.: 18 Level: 2 **Reference**
Status: M Max. Occ.: 1
Counter: 0280

Name: **Ship-to's reference number(s)**

UN/EDIFACT				Implementation		
	Name	St	Format	St	Format	Use / Remarks
RFF						
C506	Reference	M		M		
1153	Reference code qualifier	M	an..3	M	an..3	**AHP** **Tax registration number** **FC** **Fiscal number** **VA** **VAT registration number** **XA** **Company/place registration number**
1154	Reference identifier	C	an..70	R	an..17	AHP: The registration number by which a company/organization is identified with the tax administration. FC: Tax payer's number. Number assigned to individual persons as well as to corporates by a public institution; this number is different from the VAT registration number. VA: Unique number assigned by the relevant tax authority to identify a party for use in relation to Value Added Tax (VAT). Required in the EU invoice directive. XA: Company and Place as legally required.

Remark:

Example:

```
RFF+FC:HRB 99876'
```

Group: **SG2** Status: D Max. Occ.: 1 Buyer's Tax representative party

To be used when legally required and/or in agreement between concerned parties.

Segment: **NAD** Seq. No.: 19 Level: 1 **Name and address**
Status: M Max. Occ.: 1
Counter: 0230

Name: **Buyer's Tax representative**

UN/EDIFACT				Implementation		
	Name	St	Format	St	Format	Use / Remarks
NAD						
3035	Party function code qualifier	M	an..3	M	an..3	**LD Party recovering the Value Added Tax (VAT)**
C082	Party identification details	C		R		
3039	Party identifier	M	an..35	M	an..35	ID of Party recovering VAT
1131	Code list identification code	C	an..17	N		not used
3055	Code list responsible agency code	C	an..3	R	an..3	**92 Assigned by buyer or buyer's agent**
C058	Name and address	C		N		not used
3124	Name and address description	M	an..35	N		not used
3124	Name and address description	C	an..35	N		not used
3124	Name and address description	C	an..35	N		not used
3124	Name and address description	C	an..35	N		not used
3124	Name and address description	C	an..35	N		not used
C080	Party name	C		R		
3036	Party name	M	an..35	M	an..35	Single text line for specification of a name.
3036	Party name	C	an..35	D	an..35	c/o adress (when applicable)
C059	Street	C		D		
3042	Street and number or post office box identifier	M	an..35	M	an..35	The name that identifies the location of a house or building; usually within a street as part of an address.
3042	Street and number or post office box identifier	C	an..35	N		not used
3164	City name	C	an..35	R	an..35	The name of the city, town, or village of this address.
C819	Country subdivision details	C		O		
3229	Country subdivision identifier	C	an..9	O	an..9	State or region within a country. The use of UN LoCodes is recommended.
3251	Postal identification code	C	an..17	R	an..17	Postal code/Zip code
3207	Country identifier	C	an..3	R	a..2	Provides the country part of an address using a code. Use ISO3166 two alpha code.

Remark:

Agent/representative recovering the Value Added Tax (VAT).

If the concerned buying Volvo unit use a VAT agent/representative, this segment should be used to state a care of address to that representative.

Example:

```
NAD+LD+14489::92++VOLVO GROUP BELGIUM NV+SMALLEHEERWEG 31+GENT-OSTAKKER++B-9041+BE'
```

Group:	**SG2**	Status:	D	Max. Occ.:	1	Buyer's Tax representative party
Group:	**SG3**	Status:	D	Max. Occ.:	1	VAT registration number
Segment:	**RFF**	Seq. No.: 20 Status: M Counter: 0280		Level: 2 Max. Occ.: 1		**Reference**

Name: **VAT registration number**

UN/EDIFACT				Implementation		
	Name	St	Format	St	Format	Use / Remarks
RFF						
C506	Reference	M		M		
1153	Reference code qualifier	M	an..3	M	an..3	**VA VAT registration number**
1154	Reference identifier	C	an..70	R	an..17	VA: Unique number assigned by the relevant tax authority to identify a party for use in relation to Value Added Tax (VAT).

Remark:
Required in the EU invoice directive when NAD.3035 = LD.

Example:
```
RFF+VA:BE0464866263'
```

Group: **SG2** Status: R Max. Occ.: 1 Seller

Segment: **NAD** Seq. No.: 21 Level: 1 **Name and address**
Status: M Max. Occ.: 1
Counter: 0230

Name: **Seller's Name and Address**

UN/EDIFACT				Implementation		
	Name	St	Format	St	Format	Use / Remarks
NAD						
3035	Party function code qualifier	M	an..3	M	an..3	**SE** **Seller**
C082	Party identification details	C		R		
3039	Party identifier	M	an..35	M	an..35	Seller ID
1131	Code list identification code	C	an..17	N		not used
3055	Code list responsible agency code	C	an..3	R	an..3	**92** **Assigned by buyer or buyer's agent**
C058	Name and address	C		N		not used
3124	Name and address description	M	an..35	N		not used
3124	Name and address description	C	an..35	N		not used
3124	Name and address description	C	an..35	N		not used
3124	Name and address description	C	an..35	N		not used
3124	Name and address description	C	an..35	N		not used
C080	Party name	C		R		
3036	Party name	M	an..35	M	an..35	Single text line for specification of a name.
3036	Party name	C	an..35	O	an..35	c/o adress (when applicable)
C059	Street	C		D		
3042	Street and number or post office box identifier	M	an..35	M	an..35	The name that identifies the location of a house or building; usually within a street as part of an address.
3042	Street and number or post office box identifier	C	an..35	O	an..35	see 3042 #1
3164	City name	C	an..35	R	an..35	The name of the city, town, or village of this address.
C819	Country subdivision details	C		O		
3229	Country subdivision identifier	C	an..9	O	an..9	State or region within a country. The use of UN LoCodes is recommended.
3251	Postal identification code	C	an..17	R	an..17	Postal code/Zip code Required in the EU Invoice directive.
3207	Country identifier	C	an..3	R	a..2	Provides the country part of an address using a code. Use ISO3166 two alpha code.

Remark:
Seller: The party who has liability to fulfill the contract. It is normally used in the sense of supplier.

Example:
```
NAD+SE+123456::92++SELLER NAME+SELLER STREET AND NUMBER+SELLER CITY++22222+NO'
```

Group: SG2 Status: R Max. Occ.: 1 Seller

Group: SG3 Status: D Max. Occ.: 5 Seller's reference number(s)

To be used when legally required and/or in agreement between concerned parties.

Segment: **RFF** Seq. No.: 22 Level: 2 **Reference**
Status: M Max. Occ.: 1
Counter: 0280

Name: **Seller's reference number(s)**

UN/EDIFACT				Implementation		
	Name	St	Format	St	Format	Use / Remarks
RFF						
C506	Reference	M		M		
1153	Reference code qualifier	M	an..3	M	an..3	**AHP** **Tax registration number** **FC** **Fiscal number** **VA** **VAT registration number** **XA** **Company/place registration number**
1154	Reference identifier	C	an..70	R	an..18	AHP: The registration number by which a company/organization is identified with the tax administration. FC: Tax payer's number. Number assigned to individual persons as well as to corporates by a public institution; this number is different from the VAT registration number. VA: Unique number assigned by the relevant tax authority to identify a party for use in relation to Value Added Tax (VAT). XA: Company and Place as legally required.

Remark:
VAT registration number (VA in RFF.1153) is required in the EU invoice directive.

Example:
```
RFF+VA:NO811123456'
```

Group: **SG2** Status: D Max. Occ.: 1 Seller as officially registered

To be used when legally required and/or in agreement between concerned parties.

Segment: **NAD** Seq. No.: 23 Level: 1 **Name and address**
Status: M Max. Occ.: 1
Counter: 0230

Name: **Seller as officially registered**

UN/EDIFACT				Implementation		
	Name	St	Format	St	Format	Use / Remarks
NAD						
3035	Party function code qualifier	M	an..3	M	an..3	**FH Seller as officially registered**
C082	Party identification details	C		N		not used
3039	Party identifier	M	an..35	N		not used
C058	Name and address	C		R		
3124	Name and address description	M	an..35	M	an..35	A text line containing non-structured name and address information.
3124	Name and address description	C	an..35	O	an..35	see 3124 #1
3124	Name and address description	C	an..35	O	an..35	see 3124 #1
3124	Name and address description	C	an..35	O	an..35	see 3124 #1
3124	Name and address description	C	an..35	O	an..35	see 3124 #1
C080	Party name	C		N		not used
3036	Party name	M	an..35	N		not used
C059	Street	C		N		not used
3042	Street and number or post office box identifier	M	an..35	N		not used
3164	City name	C	an..35	N		not used
C819	Country subdivision details	C		N		not used
3229	Country subdivision identifier	C	an..9	N		not used
3251	Postal identification code	C	an..17	N		not used

Remark:
Used when the goods and invoice are created from different countries and a legal agent is required in the country of the consignor.

Example:
```
NAD+FH++SELLER INC.:SAMPLE STREET 99:SAMPLE TOWN:DE-80559'
```

Group: **SG2** Status: D Max. Occ.: 1 Payee

To be used when legally required and/or in agreement between concerned parties.

Segment: **NAD** Seq. No.: 24 Level: 1 **Name and address**
Status: M Max. Occ.: 1
Counter: 0230

Name: **Payee's Name and Address**

UN/EDIFACT				Implementation		
	Name	St	Format	St	Format	Use / Remarks
NAD						
3035	Party function code qualifier	M	an..3	M	an..3	**PE Payee**
C082	Party identification details	C		O		
3039	Party identifier	M	an..35	M	an..35	Payee ID
1131	Code list identification code	C	an..17	N		not used
3055	Code list responsible agency code	C	an..3	R	an..3	**92 Assigned by buyer or buyer's agent**
C058	Name and address	C		N		not used
3124	Name and address description	M	an..35	N		not used
3124	Name and address description	C	an..35	N		not used
3124	Name and address description	C	an..35	N		not used
3124	Name and address description	C	an..35	N		not used
3124	Name and address description	C	an..35	N		not used
C080	Party name	C		R		
3036	Party name	M	an..35	M	an..35	Single text line for specification of a name.
3036	Party name	C	an..35	O	an..35	c/o address (when applicable)
C059	Street	C		D		
3042	Street and number or post office box identifier	M	an..35	M	an..35	The name that identifies the location of a house or building; usually within a street as part of an address.
3042	Street and number or post office box identifier	C	an..35	O	an..35	Payee's Street line 2
3164	City name	C	an..35	R	an..35	The name of the city, town, or village of this address.
C819	Country subdivision details	C		O		
3229	Country subdivision identifier	C	an..9	O	an..9	State or region within a country. The use of UN LoCodes is recommended.
3251	Postal identification code	C	an..17	R	an..17	Postal code/Zip code
3207	Country identifier	C	an..3	R	a..2	Provides the country part of an address using a code. Use ISO3166 two alpha code.

Remark:

Party to whom a payment has to be made.

Required in the EU invoice directive: To be used even if the Payee is equal to Seller. If the seller is introducing a new party to receive payment; Volvo has to be notified separately.

Example:

```
NAD+PE+123456::92++PAYEE NAME+PAYEE STREET AND NUMBER+PAYEE CITY++22222+DE'
```

Group: **SG2** Status: D Max. Occ.: 1 Payee

To be used when legally required and/or in agreement between concerned parties.

Segment: **FII** Seq. No.: 25 Level: 2 **Financial institution information**
Status: R Max. Occ.: 1
Counter: 0250

Name: **Pay-to's financial institution**

UN/EDIFACT				Implementation		
	Name	St	Format	St	Format	Use / Remarks
FII						
3035	Party function code qualifier	M	an..3	M	an..3	**BF** **Beneficiary's bank**
C078	Account holder identification	C		R		
3194	Account holder identifier	C	an..35	R	an..35	Payee's Financial Institution Account Number Account number at the financial institution where this account is held. For IBAN, a length of 34 bytes is necessary.
3192	Account holder name	C	an..35	R	an..35	Name of the official account holder, as registered with a financial institution.
C088	Institution identification	C		R		
3433	Institution name code	C	an..11	N		not used
1131	Code list identification code	C	an..17	N		not used
3055	Code list responsible agency code	C	an..3	N		not used
3434	Institution branch identifier	C	an..17	N		not used
1131	Code list identification code	C	an..17	N		not used
3055	Code list responsible agency code	C	an..3	N		not used
3432	Institution name	C	an..70	R	an..35	The name of the financial institution.

Remark:

Account details within financial institution.
If the supplier requires the payment to be made to a new account number; the purchaser at Volvo has to be notified in advance.

Example:

```
FII+BF+DE59600700700119067713:SUPPLIER CORP+::::::DEUTSCHE  BANK  AG'
```

Group: **SG2** Status: D Max. Occ.: 1 Payee

Group: **SG3** Status: D Max. Occ.: 5 Payee's reference number(s)

To be used when legally required and/or in agreement between concerned parties.

Segment: **RFF** Seq. No.: 26 Level: 2 **Reference**
Status: M Max. Occ.: 1
Counter: 0280

Name: **Payee's reference number(s)**

UN/EDIFACT				Implementation		
	Name	St	Format	St	Format	Use / Remarks
RFF						
C506	Reference	M		M		
1153	Reference code qualifier	M	an..3	M	an..3	**AHP** **Tax registration number** **FC** **Fiscal number** **VA** **VAT registration number** **XA** **Company/place registration number**
1154	Reference identifier	C	an..70	R	an..17	AHP: The registration number by which a company/organization is identified with the tax administration. FC: Tax payer's number. Number assigned to individual persons as well as to corporates by a public institution; this number is different from the VAT registration number. VA: Unique number assigned by the relevant tax authority to identify a party for use in relation to Value Added Tax (VAT). XA: Company and Place as legally required.

Remark:

Example:

```
RFF+VA:DE811123456'
```

Group: **SG2** Status: D Max. Occ.: 1 Ship-from

Segment: **NAD** Seq. No.: 27 Level: 1 **Name and address**
Status: M Max. Occ.: 1
Counter: 0230

Name: **Ship-from's Name and Address**

UN/EDIFACT				Implementation		
	Name	St	Format	St	Format	Use / Remarks
NAD						
3035	Party function code qualifier	M	an..3	M	an..3	**SF** **Ship from**
C082	Party identification details	C		D		
3039	Party identifier	M	an..35	M	an..35	Ship-From ID
1131	Code list identification code	C	an..17	N		not used
3055	Code list responsible agency code	C	an..3	R	an..3	**92** **Assigned by buyer or buyer's agent**
C058	Name and address	C		N		not used
3124	Name and address description	M	an..35	N		not used
C080	Party name	C		D		
3036	Party name	M	an..35	M	an..35	Single text line for specification of a name.
3036	Party name	C	an..35	O	an..35	c/o address (when applicable)
C059	Street	C		D		
3042	Street and number or post office box identifier	M	an..35	M	an..35	The name that identifies the location of a house or building; usually within a street as part of an address.
3042	Street and number or post office box identifier	C	an..35	O	an..35	see 3042 #1
3164	City name	C	an..35	D	an..35	The name of the city, town, or village of this address.
C819	Country subdivision details	C		O		
3229	Country subdivision identifier	C	an..9	O	an..9	State or region within a country. The use of UN LoCodes is recommended.
3251	Postal identification code	C	an..17	D	an..17	Postal code/Zip code
3207	Country identifier	C	an..3	R	a..2	Provides the country part of an address using a code. Use ISO3166 two alpha code.

Remark:
Use Ship-From in accordance with information in the order or after agreement with Volvo.

Example:
```
NAD+SF+22222::92++SHIP-FROM NAME+SHIP-FROM STREET AND NUMBER+CITY+SE-O+10369+DE'
```

Group: **SG2** Status: D Max. Occ.: 1 Ship-from

Group: **SG3** Status: D Max. Occ.: 5 Ship-from's reference number(s)

To be used when legally required and/or in agreement between concerned parties.

Segment: **RFF** Seq. No.: 28 Level: 2 **Reference**
Status: M Max. Occ.: 1
Counter: 0280

Name: **Ship-from's reference number(s)**

UN/EDIFACT				Implementation		
	Name	St	Format	St	Format	Use / Remarks
RFF						
C506	Reference	M		M		
1153	Reference code qualifier	M	an..3	M	an..3	**AHP** **Tax registration number** **FC** **Fiscal number** **VA** **VAT registration number** **XA** **Company/place registration number**
1154	Reference identifier	C	an..70	R	an..17	AHP: The registration number by which a company/organization is identified with the tax administration. FC: Tax payer's number. Number assigned to individual persons as well as to corporates by a public institution; this number is different from the VAT registration number. VA: Unique number assigned by the relevant tax authority to identify a party for use in relation to Value Added Tax (VAT). Required in the EU invoice directive. XA: Company and Place as legally required.

Remark:

Example:

```
RFF+FC:HRB 99876'
```

Group: **SG2** Status: D Max. Occ.: 1 Invoice issuer

Segment: **NAD** Seq. No.: 29 Level: 1 **Name and address**
Status: M Max. Occ.: 1
Counter: 0230

Name: **Invoice issuer's Name and Address**

UN/EDIFACT				Implementation		
	Name	St	Format	St	Format	Use / Remarks
NAD						
3035	Party function code qualifier	M	an..3	M	an..3	**II** **Invoice issuer**
C082	Party identification details	C		D		
3039	Party identifier	M	an..35	M	an..35	Invoice Issuer ID This ID must be assigned by the buyer and used in agreement between concerned parties.
1131	Code list identification code	C	an..17	N		not used
3055	Code list responsible agency code	C	an..3	R	an..3	**92** **Assigned by buyer or buyer's agent**
C058	Name and address	C		N		not used
3124	Name and address description	M	an..35	N		not used
C080	Party name	C		R		
3036	Party name	M	an..35	M	an..35	Single text line for specification of a name.
3036	Party name	C	an..35	O	an..35	c/o address (when applicable)
C059	Street	C		D		
3042	Street and number or post office box identifier	M	an..35	M	an..35	The name that identifies the location of a house or building; usually within a street as part of an address.
3042	Street and number or post office box identifier	C	an..35	O	an..35	see 3042 #1
3164	City name	C	an..35	R	an..35	The name of the city, town, or village of this address.
C819	Country subdivision details	C		O		
3229	Country subdivision identifier	C	an..9	O	an..9	State or region within a country. The use of UN LoCodes is recommended.
3251	Postal identification code	C	an..17	R	an..17	Postal code/Zip code
3207	Country identifier	C	an..3	R	a..2	Provides the country part of an address using a code. Use ISO3166 two alpha code.

Remark:

Party who is actually issuing the invoice

To be used if Invoice issuer is not same legal entity as the Seller and only in agreement between concerned parties.

Example:

```
NAD+II+33333::92++INVOICE ISSUER NAME+INVOICE ISSUER STREET AND
NUMBER+CITY++3333+BE'
```

Group: **SG2** Status: D Max. Occ.: 1 Invoice issuer

Group: **SG3** Status: D Max. Occ.: 5 Invoice issuer's reference number(s)

To be used when legally required and/or in agreement between concerned parties.

Segment: **RFF** Seq. No.: 30 Level: 2 **Reference**
Status: M Max. Occ.: 1
Counter: 0280

Name: **Invoice issuer's reference number(s)**

UN/EDIFACT				Implementation		
	Name	St	Format	St	Format	Use / Remarks
RFF						
C506	Reference	M		M		
1153	Reference code qualifier	M	an..3	M	an..3	**AHP** **Tax registration number** **FC** **Fiscal number** **VA** **VAT registration number** **XA** **Company/place registration number**
1154	Reference identifier	C	an..70	R	an..17	AHP: The registration number by which a company/organization is identified with the tax administration. FC: Tax payer's number. Number assigned to individual persons as well as to corporates by a public institution; this number is different from the VAT registration number. VA: Unique number assigned by the relevant tax authority to identify a party for use in relation to Value Added Tax (VAT). XA: Company and Place as legally required.

Remark:

Example:

```
RFF+VA:BE66778899'
```

Group: **SG2** Status: D Max. Occ.: 1 Seller's Tax representative party

To be used when legally required and/or in agreement between concerned parties.

Segment: **NAD** Seq. No.: 31 Level: 1 **Name and address**
Status: M Max. Occ.: 1
Counter: 0230

Name: **Seller's Tax representative**

UN/EDIFACT				Implementation		
	Name	St	Format	St	Format	Use / Remarks
NAD						
3035	Party function code qualifier	M	an..3	M	an..3	**LC Party declaring the Value Added Tax (VAT)**
C082	Party identification details	C		R		
3039	Party identifier	M	an..35	M	an..35	ID of Party declaring VAT
1131	Code list identification code	C	an..17	N		not used
3055	Code list responsible agency code	C	an..3	R	an..3	**92 Assigned by buyer or buyer's agent**
C058	Name and address	C		N		not used
3124	Name and address description	M	an..35	N		not used
3124	Name and address description	C	an..35	N		not used
3124	Name and address description	C	an..35	N		not used
3124	Name and address description	C	an..35	N		not used
3124	Name and address description	C	an..35	N		not used
C080	Party name	C		R		
3036	Party name	M	an..35	M	an..35	Single text line for specification of a name.
3036	Party name	C	an..35	D	an..35	c/o adress (when applicable)
C059	Street	C		D		
3042	Street and number or post office box identifier	M	an..35	M	an..35	The name that identifies the location of a house or building; usually within a street as part of an address.
3042	Street and number or post office box identifier	C	an..35	O	an..35	see 3042 # 1
3164	City name	C	an..35	R	an..35	The name of the city, town, or village of this address.
C819	Country subdivision details	C		O		
3229	Country subdivision identifier	C	an..9	O	an..9	State or region within a country. The use of UN LoCodes is recommended.
3251	Postal identification code	C	an..17	R	an..17	Postal code/Zip code
3207	Country identifier	C	an..3	R	a..2	Provides the country part of an address using a code. Use ISO3166 two alpha code.

Remark:

Agent/representative declaring the Value Added Tax (VAT).
A business partner who is not established in a EU-Member State, but makes taxable supplies of goods or services in that Member State, may appoint a VAT-registered tax representative, to maintain/preserve VAT records on his behalf and to make any required VAT declarations to the relevant tax authority.
If a company has a VAT registration with an appointed agent/representative in an EU member state, a care of address to the representative must be stated on the invoice.

Example:

```
NAD+LC+223456::92++SELLER NAME:C/O ABC INC.+SMALL LANE 35+NEWTOWN++WC2-5CD+GB'
```

Group:	**SG2**	Status:	D	Max. Occ.:	1	Seller's Tax representative party
Group:	**SG3**	Status:	D	Max. Occ.:	1	VAT registration number
Segment:	**RFF**	Seq. No.: 32 Status: M Counter: 0280		Level: 2 Max. Occ.: 1		**Reference**

Name: **VAT registration number**

UN/EDIFACT				Implementation		
	Name	St	Format	St	Format	Use / Remarks
RFF						
C506	Reference	M		M		
1153	Reference code qualifier	M	an..3	M	an..3	**VA VAT registration number**
1154	Reference identifier	C	an..70	R	an..17	VA: Unique number assigned by the relevant tax authority to identify a party for use in relation to Value Added Tax (VAT).

Remark:

Example:

```
RFF+VA:GB77766655'
```

Group: **SG7** Status: R Max. Occ.: 1 Invoice and home currency

Segment: **CUX** Seq. No.: 33 Level: 1 **Currencies**
Status: M Max. Occ.: 1
Counter: 0410

Name: **Currencies**

UN/EDIFACT				Implementation		
	Name	St	Format	St	Format	Use / Remarks
CUX						
C504	Currency details	C		R		
6347	Currency usage code qualifier	M	an..3	M	an..3	**2 Reference currency**
6345	Currency identification code	C	an..3	R	an..3	Invoicing currency Code specifying a monetary unit. Use ISO 4217 three alpha code.
6343	Currency type code qualifier	C	an..3	R	an..3	**4 Invoicing currency**
C504	Currency details	C		D		Only to be used after agreement with Volvo. Target Currency specifies the currency that has to be used for accounting, taxation or calculation purposes if a monetary amount is given in a different currency. Use ISO 4217 three alpha code.
6347	Currency usage code qualifier	M	an..3	M	an..3	**3 Target currency**
6345	Currency identification code	C	an..3	R	an..3	Code specifying a monetary unit. Use ISO 4217 three alpha code.
6343	Currency type code qualifier	C	an..3	R	an..3	**3 Home currency**
5402	Currency exchange rate	C	n..12	D	n..12	The rate at which one specified currency is expressed in another specified currency. Currency Conversion Rate should be given with 5 decimals.

Remark:

Required in the EU Invoice directive.

Invoicing currency is always to be given in the first occurrence of the C504#1 as follows:
6347 '2', 6345 Currency, 6343 '4'

In some cases it is a requirement that, for invoicing in foreign currency, the invoice taxable and tax (e.g. VAT) amounts also must be expressed in home currency. Relating this to the CUX segments; authorities would require the invoicing currency and the home currency to be shown, together with the applied rate of exchange (element 5402).

If a different home currency is to be given, the second occurrence of C504 in the CUX segment is to be used as follows:
second 6347: '3', second 6345 contains the currency, and second 6343: '3'. Data element 5402 contains the currency conversion rate.

Example:

```
CUX+2:EUR:4+3:SEK:3+9.98700'
```

Group: **SG7** Status: R Max. Occ.: 1 Invoice and home currency

Segment: **DTM** Seq. No.: 34 Level: 2 **Date/time/period**
Status: D Max. Occ.: 1
Counter: 0420

Name: **Exchange rate date**

UN/EDIFACT				Implementation		
	Name	St	Format	St	Format	Use / Remarks
DTM						
C507	Date/time/period	M		M		
2005	Date or time or period function code qualifier	M	an..3	M	an..3	**134** **Rate of exchange date/time**
2380	Date or time or period text	C	an..35	R	n..8	To specify the date, a given exchange rate between two currencies has been calculeted (or has been published by other sources).
2379	Date or time or period format code	C	an..3	R	an..3	**102** **CCYYMMDD**

Remark:
This segment has to be sent if SG7.CUX.C504 is used more than once (i.e. if invoicing and home currency is specified).

Example:
```
DTM+134:20041230:102'
```

Group: **SG8** Status: D Max. Occ.: 10 Payment instructions

SG8 is only to be used in the Self-billed invoice process (i.e. if BGM.1001=389).

Segment: **PYT** Seq. No.: 35 Level: 1 **Payment terms**
Status: M Max. Occ.: 1
Counter: 0440

Name: **Payment terms**

UN/EDIFACT				Implementation		
	Name	St	Format	St	Format	Use / Remarks
PYT						
4279	Payment terms type code qualifier	M	an..3	M	an..3	Conditions of payment between the parties to a transaction. **1 Basic**
C019	Payment terms	C		N		not used
4277	Payment terms description identifier	C	an..17	N		not used
2475	Event time reference code	C	an..3	R	an..3	Reference to the date of a specific event, e.g. issue date of a specified business document (for example invoice date). **5 Date of invoice**
2009	Terms time relation code	C	an..3	O	an..3	Code relating terms to a reference date, time or period. Date (Relation): **1 Reference date** **2 Before reference** **3 After reference** **4 End of 10-day period containing the reference date** **5 End of 2-week period containing the reference date** **6 End of month containing the reference date** **8 End of quarter containing the reference date** **9 End of year containing the reference date** **12 End of half year containing the reference date**
2151	Period type code	C	an..3	O	an..3	Code identifying a period Type Of Period: **3M Quarter** **6M Half-year** **D Day** **M Month** **P Four month period** **W Week** **Y Year**
2152	Period count quantity	C	n..3	O	n..3	Actual number of periods (days, weeks etc.) belonging to a payment term.

Remark:

Example:

```
PYT+1++5+1+D+10'
```

Group: **SG8** Status: D Max. Occ.: 10 Payment instructions

SG8 is only to be used in the Self-billed invoice process (i.e. if BGM.1001=389).

Segment: **DTM** Seq. No.: 36 Level: 2 **Date/time/period**
Status: O Max. Occ.: 1
Counter: 0450

Name: **Payment due date**

UN/EDIFACT				Implementation		
	Name	St	Format	St	Format	Use / Remarks
DTM						
C507	Date/time/period	M		M		
2005	Date or time or period function code qualifier	M	an..3	M	an..3	**140** **Payment due date**
2380	Date or time or period text	C	an..35	R	n..8	Date when the payment is due in order to comply with the specified payment terms.
2379	Date or time or period format code	C	an..3	R	an..3	**102** **CCYYMMDD**

Remark:
This segment can be used in conjunction with any of the applicable qualifiers in SG8.PYT segment.

Example:
```
DTM+140:20040110:102'
```

Group: **SG8** Status: D Max. Occ.: 10 Payment instructions

SG8 is only to be used in the Self-billed invoice process (i.e. if BGM.1001=389).

Segment: **DTM** Seq. No.: 37 Level: 2 **Date/time/period**
Status: O Max. Occ.: 1
Counter: 0450

Name: **Reference date/time**

UN/EDIFACT				Implementation			
	Name	St	Format	St	Format	Use / Remarks	
DTM							
C507	Date/time/period	M		M			
2005	Date or time or period function code qualifier	M	an..3	M	an..3	**171**	**Reference date/time**
2380	Date or time or period text	C	an..35	R	n..8	Date, the referenced document was issued, usually the invoice issue date	
2379	Date or time or period format code	C	an..3	R	an..3	**102**	**CCYYMMDD**

Remark:
The reference date is related to data element PYT.2009 . If data element PYT.2009 is filled, this reference date has to be specified.

Example:
```
DTM+171:20040131:102'
```

Group: **SG9** Status: D Max. Occ.: 10 Transport details

To be used when legally required and/or in agreement between concerned parties.

Segment: **TDT** Seq. No.: 38 Level: 1 **Transport information**
Status: M Max. Occ.: 1
Counter: 0510

Name: **Transport information**

UN/EDIFACT				Implementation		
	Name	St	Format	St	Format	Use / Remarks
TDT						
8051	Transport stage code qualifier	M	an..3	M	an..3	Code specifying the stage of a transport, i.e. in case of a multi-step route. **10 Pre-carriage transport** **12 At departure** **20 Main-carriage transport** **25 Delivery carrier all transport** **30 On-carriage transport**
8028	Means of transport journey identifier	C	an..17	O	an..17	Unique reference to a certain journey or departure of a means of transport (generic term).
C220	Mode of transport	C		O		
8067	Transport mode name code	C	an..3	R	an..3	**10 Maritime transport** **20 Rail transport** **30 Road transport** **40 Air transport** **50 Mail** **60 Multimodal transport** **U Private Parcel Service**
C001	Transport means	C		N		not used
8179	Transport means description code	C	an..8	N		not used
C040	Carrier	C		N		not used
3127	Carrier identifier	C	an..17	N		not used
8101	Transit direction indicator code	C	an..3	N		not used

Remark:

To specify the transport details such as mode of transport, means of transport, it's conveyance reference number and the identification of the means of transport.

Example:

```
TDT+12++10'
```

Group: **SG9** Status: D Max. Occ.: 10 Transport details

Group: **SG10** Status: D Max. Occ.: 10 LOC

To be used when legally required and/or in agreement between concerned parties.

Segment: **LOC** Seq. No.: 39 Level: 2 **Place/location identification**
Status: M Max. Occ.: 1
Counter: 0540

Name: **Place/location identification**

UN/EDIFACT				Implementation		
	Name	St	Format	St	Format	Use / Remarks
LOC						
3227	Location function code qualifier	M	an..3	M	an..3	**5 Place of departure** **60 Place of arrival**
C517	Location identification	C		M		
3225	Location identifier	C	an..35	R	an..35	Place of departure or arrival ID. The use of UN/LOCODE (ISO 3166) or airport codes (IATA) is recommended.
1131	Code list identification code	C	an..17	N		not used
3055	Code list responsible agency code	C	an..3	R	an..3	**1 CCC (Customs Co-operation Council)** **2 CEC (Commission of the European Communities)** **3 IATA (International Air Transport Association)** **4 ICC (International Chamber of Commerce)** **5 ISO (International Organization for Standardization)**
3224	Location name	C	an..256	O	an..256	Place of departure or arrival, free text.

Remark:
If required: Both LOC+5 and LOC+60 should be given.

Example:
```
LOC+5+LHR::3:LONDON HEATHROW'
LOC+60+GOT::3:LANDVETTER'
```

Group: **SG26** Status: R Max. Occ.: 9999999 Line item section

Segment: **LIN** Seq. No.: 40 Level: 1 **Line item**
Status: M Max. Occ.: 1
Counter: 1100

Name: **Line item**

UN/EDIFACT				Implementation		
	Name	St	Format	St	Format	Use / Remarks
LIN						
1082	Line item identifier	C	an..6	R	n..6	Sequential number generated by the sender to identify a line item within a message. It is recommended to start with value 1 and to increment by 1 for each new line.
1229	Action code	C	an..3	N		not used
C212	Item number identification	C		R		
7140	Item identifier	C	an..35	R	an..35	Buyer's Article Number
7143	Item type identification code	C	an..3	R	an..3	**IN** **Buyer's item number**

Remark:

Example:

```
LIN+1++1234567890:IN'
```

Group: **SG26** Status: R Max. Occ.: 9999999 Line item section

Segment: **PIA** Seq. No.: 41 Level: 2 **Additional product id**
Status: D Max. Occ.: 1
Counter: 1110

Name: **Additional article identifier**

UN/EDIFACT				Implementation			
	Name	St	Format	St	Format	Use / Remarks	
PIA							
4347	Product identifier code qualifier	M	an..3	M	an..3	**1**	**Additional identification**
C212	Item number identification	M		M			
7140	Item identifier	C	an..35	R	an..35	Seller's Article Number	
7143	Item type identification code	C	an..3	R	an..3	**SA**	**Supplier's article number**

Remark:
To be used according to agreement between concerned parties.

Example:
```
PIA+1+123456:SA'
```

Group: **SG26** Status: R Max. Occ.: 9999999 Line item section

Segment: **IMD** Seq. No.: 42 Level: 2 **Item description**
Status: D Max. Occ.: 1
Counter: 1130

Name: **Description of article or service**

UN/EDIFACT				Implementation		
	Name	St	Format	St	Format	Use / Remarks
IMD						
7077	Description format code	C	an..3	N		not used
C272	Item characteristic	C		N		not used
7081	Item characteristic code	C	an..3	N		not used
C273	Item description	C		R		
7009	Item description code	C	an..17	N		not used
1131	Code list identification code	C	an..17	N		not used
3055	Code list responsible agency code	C	an..3	N		not used
7008	Item description	C	an..256	R	an..70	Plain language description of articles or products. Text/Description in English only.
7008	Item description	C	an..256	N		not used
3453	Language name code	C	an..3	R	a..2	Code specifying the language name. Use ISO 639-1988.

Remark:
Required in the EU invoice directive.
This segment should be used for products or services that cannot be fully identified by a product code or article number.

Example:
```
IMD+++:::LEFT BRAKE MOUNT::EN'
```

Group: **SG26** Status: R Max. Occ.: 9999999 Line item section

Segment: **QTY** Seq. No.: 43 Level: 2 **Quantity**
Status: R Max. Occ.: 1
Counter: 1150

Name: **Invoiced quantity**

UN/EDIFACT				Implementation		
	Name	St	Format	St	Format	Use / Remarks
QTY						
C186	Quantity details	M		M		
6063	Quantity type code qualifier	M	an..3	M	an..3	**47 Invoiced quantity**
6060	Quantity	M	an..35	M	n..10	Invoiced quantity. Decimals not allowed.
6411	Measurement unit code	C	an..8	D	an..3	Code specifying the unit of measurement. Use the Measurement unit code given in the Order. Use UN/ECE Recommendation 20, Common code.

Remark:
If a value in 6411 is not given; quantity is regarded as per pieces.

Example:
```
QTY+47:10:C62'
```

Group: **SG26** Status: R Max. Occ.: 9999999 Line item section

Segment: **QTY** Seq. No.: 44 Level: 2 **Quantity**
Status: D Max. Occ.: 2
Counter: 1150

Name: **Other quantities**

UN/EDIFACT				Implementation		
	Name	St	Format	St	Format	Use / Remarks
QTY						
C186	Quantity details	M		M		
6063	Quantity type code qualifier	M	an..3	M	an..3	**12** **Despatch quantity** **48** **Received quantity**
6060	Quantity	M	an..35	M	n..10	Despatched quantity. The quantity received by the Ship-To party. Decimals not allowed.
6411	Measurement unit code	C	an..8	D	an..3	Code specifying the unit of measurement. Use the Measurement unit code given in the Order. Use UN/ECE Recommendation 20, Common code.

Remark:
This segment is only to be used in the Self-billed invoice process (i.e. if BGM.1001=389).
If a value in 6411 is not given; quantity is regarded as per pieces.

Example:
```
QTY+12:10:C62'
```

Group: **SG26** Status: R Max. Occ.: 9999999 Line item section

Segment: **ALI** Seq. No.: 45 Level: 2 **Additional information**
Status: M Max. Occ.: 1
Counter: 1170

Name: **Additional information**

UN/EDIFACT				Implementation		
	Name	St	Format	St	Format	Use / Remarks
ALI						
3239	Country of origin identifier	C	an..3	R	a..2	Country Of Origin code. Identification of the name of the country or other geographical entity as defined in ISO 3166-1 (two alpha country code).
9213	Duty regime type code	C	an..3	N		not used
4183	Special condition code	C	an..3	D	an..2	An indication for Customs of the type of contract under which goods are supplied (code list ODDC013). **7 Subject to commission** **35 Consigned to** **70 Supply for sale 'on approval' or after trial** **71 Exchange of goods compensated in kind** **72 Sale for export by foreigner travelling in member state concerned** **73 Samples** **74 Temporary export, loan or hire** **75 Temporary export, leasing** **76 Temporary export, operation for job processing** **77 Temporary export, repair and maintenance against payment** **78 Temporary export, repair and maintenance free of charge** **79 Reimport following job processing** **80 Reimport following repair and maintenance against payment** **81 Reimport following repair and maintenance free of charge** **82 Supply of goods under joint production contract for defence purposes** **83 Supply of goods under joint production contract for civil purposes** **84 Supply of goods for warehousing for foreign account** **85 Supply of goods as gifts by country of despatch and food aid under European Economic Community regulation** **86 Supply of goods for disaster relief equipment** **87 Supply of goods as transactions without compensation** **88 Supply of goods as returned consignment on which payment has been made** **89 Supply of goods as returned consignment on which no payment has been made** **90 Supply of goods in standard exchange giving rise to payment** **91 Supply of goods in standard exchange not giving rise to payment** **92 Supply of goods/services in standard exchange under warranty**

Remark:

Element 4183 should be used for government reporting of goods and services traded internationally under the North American Free Trade Agreement.

Example:

```
ALI+US++74'
```

Group: **SG26** Status: R Max. Occ.: 9999999 Line item section

Segment: **DTM** Seq. No.: 46 Level: 2 **Date/time/period**
Status: D Max. Occ.: 1
Counter: 1180

Name: **Goods receipt date**

UN/EDIFACT				Implementation			
	Name	St	Format	St	Format	Use / Remarks	
DTM							
C507	Date/time/period	M		M			
2005	Date or time or period function code qualifier	M	an..3	M	an..3	**50**	**Goods receipt date/time**
2380	Date or time or period text	C	an..35	R	an..12	Date when the Ship-to party received a shipment.	
2379	Date or time or period format code	C	an..3	R	an..3	**102** **203**	**CCYYMMDD** **CCYYMMDDHHMM**

Remark:
This segment is only to be used in the Self-billed invoice process (i.e. if BGM.1001=389).

Example:
```
DTM+50:20041214:102'
```

Group: **SG26** Status: R Max. Occ.: 9999999 Line item section

Segment: **GIN** Seq. No.: 47 Level: 2 **Goods identity number**
Status: D Max. Occ.: 1000
Counter: 1190

Name: **Goods identity number**

UN/EDIFACT				Implementation		
	Name	St	Format	St	Format	Use / Remarks
GIN						
7405	Object identification code qualifier	M	an..3	M	an..3	**BN** **Serial number** **EE** **Engine number** **VV** **Vehicle identity number**
C208	Identity number range	M		M		
7402	Object identifier	M	an..35	R	an..35	Unique number affixed by the manufacturer to individual pieces of products for identification purposes (such as VIN, Serial number or Engine number).
C208	Identity number range	C		D		
7402	Object identifier	M	an..35	M	an..35	see C208.7402 #1
C208	Identity number range	C		D		
7402	Object identifier	M	an..35	M	an..35	see C208.7402 #1
C208	Identity number range	C		D		
7402	Object identifier	M	an..35	M	an..35	see C208.7402 #1
C208	Identity number range	C		D		
7402	Object identifier	M	an..35	M	an..35	see C208.7402 #1

Remark:
To be used according to agreement between concerned parties.

Example:
```
GIN+BN+1234+2345+3456+4567+5678'
GIN+EE+1234+2345+3456+4567+5678'
GIN+VV+1234+2345+3456+4567+5678'
```

Group:	**SG26**	Status:	R	Max. Occ.:	9999999	Line item section
Group:	**SG27**	Status:	R	Max. Occ.:	1	Line item gross amount
Segment:	**MOA**	Seq. No.: 48 Status: M Counter: 1260		Level: 2 Max. Occ.: 1		**Monetary amount**

Name: **Line item gross amount in invoice currency**

UN/EDIFACT				Implementation		
	Name	St	Format	St	Format	Use / Remarks
MOA						
C516	Monetary amount	M		M		
5025	Monetary amount type code qualifier	M	an..3	M	an..3	**38** **Invoice item amount**
5004	Monetary amount	C	n..35	R	n..15	Value of line item gross amount in currency units. Maximum 2 decimals.
6345	Currency identification code	C	an..3	N		not used

Remark:
The line item amount is the total related to this line item (price * quantity).

Example:
```
MOA+38:1000'
```

Group:	**SG26**	Status:	R	Max. Occ.:	9999999	Line item section
Group:	**SG29**	Status:	R	Max. Occ.:	1	Calculation gross price
Segment:	**PRI**	Seq. No.: 49 Status: M Counter: 1340		Level: 2 Max. Occ.: 1		**Price details**

Name: **Price details**

UN/EDIFACT				Implementation		
	Name	St	Format	St	Format	Use / Remarks
PRI						
C509	Price information	C		R		
5125	Price code qualifier	M	an..3	M	an..3	**AAB Calculation gross**
5118	Price amount	C	n..15	R	n..15	Unit gross price amount in price currency units. Maximum 2 decimals.
5375	Price type code	C	an..3	N		not used
5387	Price specification code	C	an..3	N		not used
5284	Unit price basis quantity	C	n..9	D	n..9	Basis on which the unit price/rate applies. The values 1, 100 and 1000 are approved. Default value is 1.
6411	Measurement unit code	C	an..8	D	an..3	Code specifying the unit of measurement. Use the Measurement unit code given in the Order. Use UN/ECE Recommendation 20, Common code.

Remark:

Price without charges (ALC); this represents the gross price applicable to the line, but does not include any charges that may be applicable to the line and which are deductible from the gross price.
If a value in 6411 is not given; quantity is regarded as per pieces.

Example:

```
PRI+AAB:100'
```

Group:	**SG26**	Status: R		Max. Occ.:	9999999	Line item section
Group:	**SG30**	Status: R		Max. Occ.:	6	References to messages
Segment:	**RFF**	Seq. No.:	50	Level:	2	**Reference**
		Status:	M	Max. Occ.:	1	
		Counter:	1400			

Name: **Reference message number**

UN/EDIFACT				Implementation		
	Name	St	Format	St	Format	Use / Remarks
RFF						
C506	Reference	M		M		
1153	Reference code qualifier	M	an..3	R	an..3	**AAK** **Despatch advice number** **CR** **Customer reference number** **ON** **Buyers order number** **OP** **Original purchase order**
1154	Reference identifier	C	an..70	R	an..70	Unique identifier of a referenced despatch advice, blanket order, buyer's order, original purchase order, promotional deal or other customer reference.
1156	Document line identifier	C	an..6	D	n..6	Use Order line number after agreement with Volvo.

Remark:

Reference to both order and despatch advice is always required , i.e. qualifier AAK and ON. Use qualifier CR & OP after agreement with Volvo.

Example:

```
RFF+AAK:333444'
RFF+CR:1234567'
RFF+ON:49501526070'
RFF+OP:67890'
```

Group:	**SG26**	Status:	R	Max. Occ.:	9999999	Line item section
Group:	**SG30**	Status:	R	Max. Occ.:	6	References to messages
Segment:	**DTM**	Seq. No.: 51 Status: D Counter: 1410		Level: 3 Max. Occ.: 1		**Date/time/period**

Name: **Reference message date**

UN/EDIFACT				Implementation			
	Name	St	Format	St	Format	Use / Remarks	
DTM							
C507	Date/time/period	M		M			
2005	Date or time or period function code qualifier	M	an..3	M	an..3	**171**	**Reference date/time**
2380	Date or time or period text	C	an..35	R	an..8	Reference date	
2379	Date or time or period format code	C	an..3	R	an..3	**102**	**CCYYMMDD**

Remark:
Required for qualifier AAK in SG30.RFF.1153.

Example:
```
DTM+171:20041212:102'
```

Group: **SG26** Status: R Max. Occ.: 9999999 Line item section

Group: **SG34** Status: D Max. Occ.: 5 VAT or other tax rate and amount for line item

SG34 to be used when legally required and/or in agreement between concerned parties.

Segment: **TAX** Seq. No.: 52 Level: 2 **Duty/tax/fee details**
Status: M Max. Occ.: 1
Counter: 1560

Name: **VAT or other tax rate line item**

UN/EDIFACT				Implementation		
	Name	St	Format	St	Format	Use / Remarks
TAX						
5283	Duty or tax or fee function code qualifier	M	an..3	M	an..3	**7 Tax** Code qualifying the function of a duty or tax or fee.
C241	Duty/tax/fee type	C		R		
5153	Duty or tax or fee type name code	C	an..3	R	an..3	Code specifying a type of duty, tax or fee. **AAG Harmonised sales tax, Canadian** **AAH Quebec sales tax** **AAI Canadian provincial sales tax** **BOL Stamp duty (Imposta di Bollo)** **GST Goods and services tax** **LOC Local sales tax** **OTH Other taxes** **STT State/provincial sales tax** **VAT Value added tax** Code OTH shall be used when the tax in question is not VAT or another tax code.
C533	Duty/tax/fee account detail	C		N		not used
5289	Duty or tax or fee account code	M	an..6	N		not used
5286	Duty or tax or fee assessment basis quantity	C	an..15	N		not used
C243	Duty/tax/fee detail	C		R		
5279	Duty or tax or fee rate code	C	an..7	N		not used
1131	Code list identification code	C	an..17	N		not used
3055	Code list responsible agency code	C	an..3	N		not used
5278	Duty or tax or fee rate	C	an..17	R	n..7	Rate (percentage) of the specified tax/duty. Maximum 3 decimals. The tax rate (numeric) should be presented as follows: 19.5% ==> 19.5 In case of VAT exemption use 0.0
5305	Duty or tax or fee category code	C	an..3	R	an..3	Code specifying a duty or tax or fee category. **E Exempt from tax** **S Standard rate** **AAA Exempt - Article 146, 148 and 151 of Council Directive 2006/112//EC** **AAC Exempt - Article 138 of Council Directive 2006/112//EC** **AAD Exempt - Article 28c(B)** **AAE Exempt - Article 48, 49 and 50 of Council Directive 2006/112//EC** **AAF Exempt - Article 346 of Council Directive 2006/112//EC** **AAG Exempt - Article 131, 132 and 135 of Council Directive 2006/112//EC** **AAH Margin Scheme - Title XII,Chapter 4 of Council Directive 2006/112//EC** **AAI Margin Scheme - Title XII, Chapter 3 of Council Directive 2006/112//EC** **AAJ Reverse Charge - Article 198 of Council Directive 2006/112//EC**

SG34 to be used when legally required and/or in agreement between concerned parties.

UN/EDIFACT				Implementation		
	Name	St	Format	St	Format	Use / Remarks
						AAL **Reverse Charge Exempt - Articles 154 -164 of Council Directive 2006/112//EC** **AAM** **Exempt New Means of Transport - Article 2, 3 and 4 of Council Directive 2006/112//EC** **AAN** **Exempt Triangulation - Article 141 of Council Directive 2006/112//EC** **AAP** **VAT exempt/reverse charge, within the construction business, Article 199 1 a-b of Council Directive 2006/112//EC** **AAQ** **Reverse Charge – Article 194 of Council Directive 2006/112//EC** Under 6th EU directive, any exemption from tax has to be declared in more detailed. There are several provisions in the directive, which allow exemption. In the European environment it is necessary to state this reason whenever the invoice issuer declares an invoice item or the whole invoice to be VAT exempt. For more Information use guidelines: Reference to Codelist VAT Category code (Tax Exemption Reason Codes list at Volvo IT's EDI homepage).
3446	Party tax identifier	C	an..20	N		not used
1227	Calculation sequence code	C	an..3	N		not used
5307	Tax or duty or fee payment due date code	C	an..3	N		not used

Remark:

Required in the EU invoice directive.

When sending a message with data element C243.5278 in the TAX segment, the value added tax rate (numeric) should be presented in an alpha-numeric field as follows: 19,5% ==> 19.5. In case of VAT exemption use 0.0.

Example:

```
TAX+7+VAT+++:::16.0+S'
```

Group: **SG26** Status: R Max. Occ.: 9999999 Line item section

Group: **SG34** Status: D Max. Occ.: 5 VAT or other tax rate and amount for line item

SG34 to be used when legally required and/or in agreement between concerned parties.

Segment: **MOA** Seq. No.: 53 Level: 3 **Monetary amount**
Status: R Max. Occ.: 1
Counter: 1570

Name: **VAT or other tax amount line item**

UN/EDIFACT				Implementation		
	Name	St	Format	St	Format	Use / Remarks
MOA						
C516	Monetary amount	M		M		
5025	Monetary amount type code qualifier	M	an..3	M	an..3	**124** **Tax amount**
5004	Monetary amount	C	n..35	R	n..15	Value of a tax amount in currency units. Maximum 2 decimals.
6345	Currency identification code	C	an..3	N		not used

Remark:

Example:

```
MOA+124:160'
```

Group: **SG26** Status: R Max. Occ.: 9999999 Line item section

Group: **SG39** Status: D Max. Occ.: 10 Charges

Only to be used after special agreement.

Segment: **ALC** Seq. No.: 54 Level: 2 **Allowance or charge**
Status: M Max. Occ.: 1
Counter: 1730

Name: **Charge**

UN/EDIFACT				Implementation		
	Name	St	Format	St	Format	Use / Remarks
ALC						
5463	Allowance or charge code qualifier	M	an..3	R	an..3	**C** **Charge**
C552	Allowance/charge information	C		N		not used
1230	Allowance or charge identifier	C	an..35	N		not used
4471	Settlement means code	C	an..3	N		not used
1227	Calculation sequence code	C	an..3	N		not used
C214	Special services identification	C		R		
7161	Special service description code	C	an..3	R	an..3	Code specifying a special service. Used after agreement with Vovo. **ABG** **Tooling charge** **ABK** **Miscellaneous** **ABL** **Additional packaging** **ABO** **Air freight transportation** **ACC** **Miscellaneous setting costs (tooling)** **ACD** **Minimum amount costs for quantity based surcharges** **ACF** **Miscellaneous treatment** **ACJ** **Painting** **ACK** **Polishing** **ACN** **Miscellaneous other surcharges** **ACS** **Fitting** **ACU** **Standard surcharge** **ACX** **Ocean freight charge** **AED** **Handling of hazardous cargo** **AEV** **Environmental protection service** **DL** **Delivery** **FAC** **Freight extraordinary handling** **FC** **Freight service** **HD** **Handling** **IAA** **Installation** **LAA** **Labour** **NAA** **Non-returnable containers** **PC** **Packing** **RAD** **Returnable container** **SAD** **Special packaging** **SH** **Special handling** **TX** **Tax** **314** **Core surcharge** **316** **Rework surcharge (global)** **332** **Stock-up surcharge**
1131	Code list identification code	C	an..17	N		not used
3055	Code list responsible agency code	C	an..3	O	an..3	**6** **UN/ECE (United Nations - Economic Commission for Europe)** **272** **Joint Automotive Industry agency**

Remark:
The financial amount by which the price is adjusted, up, dependent on the quantity of delivery or delivery terms specified.

Example:
```
ALC+C++++ACC::272'
```

Group: **SG26** Status: R Max. Occ.: 9999999 Line item section

Group: **SG39** Status: D Max. Occ.: 10 Charges

Only to be used after special agreement.

Segment: **FTX** Seq. No.: 55 Level: 3 **Free text**
Status: D Max. Occ.: 1
Counter: 1760

Name: **Charge description**

UN/EDIFACT				Implementation		
	Name	St	Format	St	Format	Use / Remarks
FTX						
4451	Text subject code qualifier	M	an..3	M	an..3	**ALC** **Allowance/charge information**
4453	Free text function code	C	an..3	N		not used
C107	Text reference	C		D		To be used (if additional classification of the text in this FTX segment is needed) in agreement between concerned parties.
4441	Free text description code	M	an..17	M	an..17	Text description code related to charge description.
C108	Text literal	C		R		
4440	Free text	M	an..512	M	an..256	Charge description, free text. Text/Description in English only.
4440	Free text	C	an..512	O	an..256	see 4440 #1
4440	Free text	C	an..512	O	an..256	see 4440 #1
3453	Language name code	C	an..3	R	a..2	**EN** **English** Code specifying the language name. Use ISO 639-1988.

Remark:
Only to be used after agreement with Volvo and related to charges.

Example:
```
FTX+ALC+++ADD COST FOR ITEM 1234567890+EN'
```

Group:	**SG26**	Status:	R	Max. Occ.:	9999999	Line item section
Group:	**SG39**	Status:	D	Max. Occ.:	10	Charges
Group:	**SG42**	Status:	R	Max. Occ.:	1	Charge - monetary amount

SG42 (monetary amount in invoicing currency) has to be sent only together with segment ALC (in SG39).

Segment: **MOA**

Seq. No.: 56 Level: 3 **Monetary amount**
Status: M Max. Occ.: 1
Counter: 1840

Name: **Charge - monetary amount**

UN/EDIFACT				Implementation		
	Name	St	Format	St	Format	Use / Remarks
MOA						
C516	Monetary amount	M		M		
5025	Monetary amount type code qualifier	M	an..3	M	an..3	**8** **Allowance or charge amount**
5004	Monetary amount	C	n..35	R	n..15	Value of a monetary amount in currency units. Maximum 2 decimals.
6345	Currency identification code	C	an..3	N		not used

Remark:

Example:

```
MOA+8:100'
```

Group:	**SG26**	Status:	R	Max. Occ.:	9999999	Line item section
Group:	**SG39**	Status:	D	Max. Occ.:	10	Charges
Group:	**SG44**	Status:	D	Max. Occ.:	5	Charge - applicable Tax rate and amount

SG44 to be used when legally required and/or in agreement between concerned parties.

Segment:	**TAX**	Seq. No.:	57	Level:	3	**Duty/tax/fee details**
		Status:	M	Max. Occ.:	1	
		Counter:	1920			

Name: **Charge - applicable tax rate**

UN/EDIFACT				Implementation		
	Name	St	Format	St	Format	Use / Remarks
TAX						
5283	Duty or tax or fee function code qualifier	M	an..3	M	an..3	Code qualifying the function of a duty or tax or fee. **7 Tax**
C241	Duty/tax/fee type	C		R		
5153	Duty or tax or fee type name code	C	an..3	R	an..3	Code specifying a type of duty, tax or fee. **AAG Harmonised sales tax, Canadian** **AAH Quebec sales tax** **AAI Canadian provincial sales tax** **BOL Stamp duty (Imposta di Bollo)** **GST Goods and services tax** **LOC Local sales tax** **OTH Other taxes** **STT State/provincial sales tax** **VAT Value added tax** Code OTH shall be used when the tax in question is not VAT or another tax code.
C533	Duty/tax/fee account detail	C		N		not used
5289	Duty or tax or fee account code	M	an..6	N		not used
5286	Duty or tax or fee assessment basis quantity	C	an..15	N		not used
C243	Duty/tax/fee detail	C		R		
5279	Duty or tax or fee rate code	C	an..7	N		not used
1131	Code list identification code	C	an..17	N		not used
3055	Code list responsible agency code	C	an..3	N		not used
5278	Duty or tax or fee rate	C	an..17	R	n..7	Rate (percentage) of the specified tax. Maximum 3 decimals. The tax rate (numeric) should be presented as follows: 19.5% ==> 19.5 In case of VAT exemption use 0.0
5273	Duty or tax or fee rate basis code	C	an..12	N		not used
1131	Code list identification code	C	an..17	N		not used
3055	Code list responsible agency code	C	an..3	N		not used
5305	Duty or tax or fee category code	C	an..3	R	an..3	Code specifying a duty or tax or fee category. **E Exempt from tax** **S Standard rate** **AAA Exempt - Article 146, 148 and 151 of Council Directive 2006/112//EC** **AAC Exempt - Article 138 of Council Directive 2006/112//EC** **AAD Exempt - Article 28c(B)** **AAE Exempt - Article 48, 49 and 50 of Council Directive 2006/112//EC** **AAF Exempt - Article 346 of Council Directive 2006/112//EC**

SG44 to be used when legally required and/or in agreement between concerned parties.

UN/EDIFACT				Implementation	
	Name	St	Format	St Format	Use / Remarks
					AAG **Exempt - Article 131, 132 and 135 of Council Directive 2006/112//EC** **AAH** **Margin Scheme - Title XII,Chapter 4 of Council Directive 2006/112//EC** **AAI** **Margin Scheme - Title XII, Chapter 3 of Council Directive 2006/112//EC** **AAJ** **Reverse Charge - Article 198 of Council Directive 2006/112//EC** **AAL** **Reverse Charge Exempt - Articles 154 -164 of Council Directive 2006/112//EC** **AAM** **Exempt New Means of Transport - Article 2, 3 and 4 of Council Directive 2006/112//EC** **AAN** **Exempt Triangulation - Article 141 of Council Directive 2006/112//EC** **AAP** **VAT exempt/reverse charge, within the construction business, Article 199 1 a-b of Council Directive 2006/112//EC** **AAQ** **Reverse Charge – Article 194 of Council Directive 2006/112//EC** Under 6th EU directive, any exemption from tax has to be declared in more detailed. There are several provisions in the directive, which allow exemption. In the European environment it is necessary to state this reason whenever the invoice issuer declares an invoice item or the whole invoice to be VAT exempt. For more Information use guidelines: Reference to Codelist VAT Category code (Tax Exemption Reason Codes list at Volvo IT's EDI homepage).
3446	Party tax identifier	C	an..20	N	not used
1227	Calculation sequence code	C	an..3	N	not used
5307	Tax or duty or fee payment due date code	C	an..3	N	not used

Remark:

Required in the EU invoice directive.

When sending a message with data element 5278 in the TAX segment, the value added tax rate (numeric) should be presented in an alpha-numeric field as follows: 19,5% ==> 19.5. In case of VAT exemption use 0.0.

Example:

```
TAX+7+VAT+++:::16.0+S'
```

Group:	**SG26**	Status:	R	Max. Occ.:	9999999	Line item section
Group:	**SG39**	Status:	D	Max. Occ.:	10	Charges
Group:	**SG44**	Status:	D	Max. Occ.:	5	Charge - applicable Tax rate and amount

SG44 to be used when legally required and/or in agreement between concerned parties.

Segment: **MOA**

Seq. No.: 58 Level: 4 **Monetary amount**
Status: R Max. Occ.: 1
Counter: 1930

Name: **Charge - applicable VAT amount**

UN/EDIFACT				Implementation		
	Name	St	Format	St	Format	Use / Remarks
MOA						
C516	Monetary amount	M		M		
5025	Monetary amount type code qualifier	M	an..3	M	an..3	**124** **Tax amount**
5004	Monetary amount	C	n..35	R	n..15	Value of a tax amount in currency units. Maximum 2 decimals.
6345	Currency identification code	C	an..3	N		not used

Remark:

Example:

```
MOA+124:16'
```

Group:	**SG26**	Status: R		Max. Occ.:	9999999	Line item section
Group:	**SG47**	Status: R		Max. Occ.:	1	Terms of delivery
Segment:	**TOD**	Seq. No.: 59 Status: M Counter: 2000		Level: 2 Max. Occ.: 1		**Terms of delivery or transport**

Name: **Terms of delivery - incoterms**

UN/EDIFACT				Implementation		
	Name	St	Format	St	Format	Use / Remarks
TOD						
4055	Delivery or transport terms function code	C	an..3	N		not used
4215	Transport charges payment method code	C	an..3	N		not used
C100	Terms of delivery or transport	C		R		
4053	Delivery or transport terms description code	C	an..3	R	a..3	Code specifying the delivery or transport terms. **CFR** **Cost and Freight (... named port of destination)** **CIF** **Cost, Insurance, Freight (... named port of destination)** **CIP** **Carriage and Insurance Paid to (... named place of destination)** **CPT** **Carriage Paid To (... named place of destination)** **DAP** **Delivery at Place (... named place of destination)** **DAT** **Delivery at Terminal (... named port or place of destination)** **DDP** **Delivered Duty Paid (... named place of destination)** **EXW** **Ex Works (... named place)** **FAS** **Free Along Ship (... named port of shipment)** **FCA** **Free Carrier (... named place)** **FOB** **Free On Board (... named port of shipment)**
1131	Code list identification code	C	an..17	N		not used
3055	Code list responsible agency code	C	an..3	O	an..3	Agency responsible for code list / identifier maintenance **4** **ICC (International Chamber of Commerce)**

Remark:

The delivery terms valid for the concerned despatch or consignment.

Example:

```
TOD+++EXW::4'
```

Group:	**SG26**	Status:	R	Max. Occ.:	9999999	Line item section
Group:	**SG47**	Status:	R	Max. Occ.:	1	Terms of delivery
Segment:	**LOC**	Seq. No.: 60 Status: R Counter: 2010		Level: 3 Max. Occ.: 1		**Place/location identification**

Name: **Place/location identification**

UN/EDIFACT				Implementation		
	Name	St	Format	St	Format	Use / Remarks
LOC						
3227	Location function code qualifier	M	an..3	M	an..3	**1 Place of terms of delivery**
C517	Location identification	C		R		
3225	Location identifier	C	an..35	D	a5	Identifier/code specifying the name of the INCOTERMS location. Either location code or name has to be transmitted.
1131	Code list identification code	C	an..17	N		not used
3055	Code list responsible agency code	C	an..3	D	an..3	Agency responsible for code list/identifier maintenance **3 IATA (International Air Transport Association)** Code list identifier should always be given if a code in data element C517.3225 is sent.
3224	Location name	C	an..256	R	an..35	Full name of the INCOTERMS place/country

Remark:

Identification of the point/port of departure, shipment or destination as required under the applicable incoterms.

Example:

```
LOC+1+:::FLEN,SWEDEN'
```

Segment: **UNS**

Seq. No.: 61 Level: 0 **Section control**
Status: M Max. Occ.: 1
Counter: 2180

Name: **Section control**

UN/EDIFACT				Implementation		
	Name	St	Format	St	Format	Use / Remarks
UNS						
0081	Section identification	M	a1	M	a1	**S** **Detail/summary section separation**

Remark:

Example:

```
UNS+S'
```

Group:	**SG50**	Status: M	Max. Occ.: 1		Total invoice amount in invoicing currency
Segment:	**MOA**	Seq. No.: 62 Status: M Counter: 2210	Level: 1 Max. Occ.: 1		**Monetary amount**

Name: **Invoice amount in invoicing currency**

UN/EDIFACT				Implementation		
	Name	St	Format	St	Format	Use / Remarks
MOA						
C516	Monetary amount	M		M		
5025	Monetary amount type code qualifier	M	an..3	M	an..3	**77 Invoice line item amount** Although the EDIFACT codelist provides another code for the sum of several invoice documents (e.g. in a summarised message like an invoice trailer) for the sake of keeping the message as simple as possible the code 77 shall be used also in those messages.
5004	Monetary amount	C	n..35	R	n..15	Invoice total amount, including taxes (if applicable). Maximum 2 decimals.
6345	Currency identification code	C	an..3	N		not used
6343	Currency type code qualifier	C	an..3	R	an..3	Amount Currency Qualifier **4 Invoicing currency**
4405	Status description code	C	an..3	N		not used

Remark:

Total sum charged in respect of a single invoice in accordance with the terms of Payment.
Invoice amount (MOA+77) is the sum of:
-Total line item amounts (MOA+79)
-Total invoice additional amount (MOA+136)
-Total duty/tax/fee amount (MOA+176)
plus or less adjustment amount (MOA+165) if used.

Relation between Home Currency and Invoicing Currency is established through data element 5402 (rate of exchange) in the SG7.CUX segment at header level.

Example:

```
MOA+77:1160::4'
```

Group: **SG50** Status: D Max. Occ.: 1 Total invoice amount in home currency

Use this SG50 when amounts also have to be specified in home currency.

Segment: **MOA** Seq. No.: 63 Level: 1 **Monetary amount**
Status: M Max. Occ.: 1
Counter: 2210

Name: **Invoice amount in home currency**

UN/EDIFACT				Implementation		
	Name	St	Format	St	Format	Use / Remarks
MOA						
C516	Monetary amount	M		M		
5025	Monetary amount type code qualifier	M	an..3	M	an..3	**77** **Invoice line item amount** Although the EDIFACT codelist provides another code for the sum of several invoice documents (e.g. in a summarised message like an invoice trailer) for the sake of keeping the message as simple as possible the code 77 shall be used also in those messages.
5004	Monetary amount	C	n..35	R	n..15	Value of a monetary amount in currency units. Maximum 2 decimals.
6345	Currency identification code	C	an..3	N		not used
6343	Currency type code qualifier	C	an..3	R	an..3	**3** **Home currency**
4405	Status description code	C	an..3	N		not used

Remark:
Total sum charged in home currency.

Example:
```
MOA+77:824.76::3'
```

Group: **SG50** Status: D Max. Occ.: 1 Total taxable amount in invoicing currency

If no taxes or duties apply to any part of the invoice this occurence of SG50 can be omitted. For transactions with European partners this SG50 shall be present for legal reasons, even if only zero rate taxes apply to the invoiced items.

Segment: **MOA** Seq. No.: 64 Level: 1 **Monetary amount**
Status: M Max. Occ.: 1
Counter: 2210

Name: **Total taxable amount in invoicing currency**

UN/EDIFACT				Implementation		
	Name	St	Format	St	Format	Use / Remarks
MOA						
C516	Monetary amount	M		M		
5025	Monetary amount type code qualifier	M	an..3	M	an..3	**125** **Taxable amount**
5004	Monetary amount	C	n..35	R	n..15	Value of taxable monetary amount in currency units. Maximum 2 decimals.
6345	Currency identification code	C	an..3	N		not used
6343	Currency type code qualifier	C	an..3	R	an..3	**4** **Invoicing currency**
4405	Status description code	C	an..3	N		not used

Remark:
To be used in agreement between concerned parties.

Example:
```
MOA+125:1000::4'
```

Group: **SG50** Status: D Max. Occ.: 1 Total taxable amount in home currency

If no taxes or duties apply to any part of the invoice this occurence of SG50 can be omitted. For transactions with European partners this SG50 might be required for legal reasons, even if only zero rate taxes apply to the invoiced items.

Segment: **MOA** Seq. No.: 65 Level: 1 **Monetary amount**
Status: M Max. Occ.: 1
Counter: 2210

Name: **Total taxable amount in home currency**

UN/EDIFACT				Implementation		
	Name	St	Format	St	Format	Use / Remarks
MOA						
C516	Monetary amount	M		M		
5025	Monetary amount type code qualifier	M	an..3	M	an..3	**125** **Taxable amount**
5004	Monetary amount	C	n..35	R	n..15	Value of taxable monetary amount in currency units. Maximum 2 decimals.
6345	Currency identification code	C	an..3	N		not used
6343	Currency type code qualifier	C	an..3	R	an..3	**3** **Home currency**

Remark:
To be used in agreement between concerned parties.

Example:
```
MOA+125:711::3'
```

Group: **SG50** Status: D Max. Occ.: 1 Total tax amount in invoicing currency

If no taxes or duties apply to any part of the invoice this occurence of SG50 can be omitted. For transactions with European partners this SG50 shall be present for legal reasons, even if the total tax amount equals zero.

Segment: **MOA** Seq. No.: 66 Level: 1 **Monetary amount**
Status: M Max. Occ.: 1
Counter: 2210

Name: **Total tax amount in invoicing currency**

UN/EDIFACT				Implementation			
	Name	St	Format	St	Format	Use / Remarks	
MOA							
C516	Monetary amount	M		M			
5025	Monetary amount type code qualifier	M	an..3	M	an..3	**176**	**Message total duty/tax/fee amount**
5004	Monetary amount	C	n..35	R	n..15	Value of tax amount in currency units. Maximum 2 decimals.	
6345	Currency identification code	C	an..3	N		not used	
6343	Currency type code qualifier	C	an..3	R	an..3	**4**	**Invoicing currency**
4405	Status description code	C	an..3	N		not used	

Remark:
To be used in agreement between concerned parties.

Example:
```
MOA+176:160::4'
```

Group: **SG50** Status: D Max. Occ.: 1 Total tax amount in home currency

If no taxes or duties apply to any part of the invoice this occurence of SG50 can be omitted. For transactions with European partners this SG50 shall be present for legal reasons, even if the total tax amount equals zero.

Segment: **MOA** Seq. No.: 67 Level: 1 **Monetary amount**
Status: M Max. Occ.: 1
Counter: 2210

Name: **Total tax amount in home currency**

UN/EDIFACT				Implementation		
	Name	St	Format	St	Format	Use / Remarks
MOA						
C516	Monetary amount	M		M		
5025	Monetary amount type code qualifier	M	an..3	M	an..3	**176** **Message total duty/tax/fee amount**
5004	Monetary amount	C	n..35	R	n..15	Value of a tax amount in home currency units. Maximum 2 decimals.
6345	Currency identification code	C	an..3	N		not used
6343	Currency type code qualifier	C	an..3	R	an..3	**3** **Home currency**
4405	Status description code	C	an..3	N		not used

Remark:
To be used in agreement between concerned parties.

Example:
```
MOA+176:113.76::3'
```

Group: **SG50** Status: R Max. Occ.: 1 Total line items amount in invoicing currency

Segment: **MOA** Seq. No.: 68 Level: 1 **Monetary amount**
Status: M Max. Occ.: 1
Counter: 2210

Name: **Total line items amount in invoicing currency**

UN/EDIFACT				Implementation		
	Name	St	Format	St	Format	Use / Remarks
MOA						
C516	Monetary amount	M		M		
5025	Monetary amount type code qualifier	M	an..3	M	an..3	**79** **Total line items amount**
5004	Monetary amount	C	n..35	R	n..15	Value of a monetary amount in currency units. Maximum 2 decimals.
6345	Currency identification code	C	an..3	N		not used
6343	Currency type code qualifier	C	an..3	R	an..3	**4** **Invoicing currency**
4405	Status description code	C	an..3	N		not used

Remark:
Total sum of all line items amounts. (SG27.C516.5004)

Example:
```
MOA+79:1000::4'
```

Group: **SG50** Status: D Max. Occ.: 1 Total invoice additional amount in invoicing currency

Use this SG50 when additional charges has been made on any line item.

Segment: **MOA** Seq. No.: 69 Level: 1 **Monetary amount**
Status: M Max. Occ.: 1
Counter: 2210

Name: **Total invoice additional amount in invoicing currency**

UN/EDIFACT				Implementation		
	Name	St	Format	St	Format	Use / Remarks
MOA						
C516	Monetary amount	M		M		
5025	Monetary amount type code qualifier	M	an..3	M	an..3	**136** **Total invoice additional amount**
5004	Monetary amount	C	n..35	R	n..15	Value of a monetary amount to be added to the sum of line items in order to arrive at the document's total amount - in invoice currency. Maximum 2 decimals.
6345	Currency identification code	C	an..3	N		not used
6343	Currency type code qualifier	C	an..3	R	an..3	**4** **Invoicing currency**

Remark:

Example:

```
MOA+136:1000::4'
```

Group:	**SG50**	Status: D	Max. Occ.: 1		Total invoice adjustment amount in invoicing currency
Segment:	**MOA**	Seq. No.: 70 Status: M Counter: 2210	Level: 1 Max. Occ.: 1		**Monetary amount**

Name: **Total invoice adjustment amount in invoicing currency**

UN/EDIFACT				Implementation		
	Name	St	Format	St	Format	Use / Remarks
MOA						
C516	Monetary amount	M		M		
5025	Monetary amount type code qualifier	M	an..3	M	an..3	**165** **Adjustment amount**
5004	Monetary amount	C	n..35	R	n..15	Value of an adjustment amount in currency units. Maximum 2 decimals. Minus (negative) sign must be used to indicate negative figures.
6345	Currency identification code	C	an..3	N		not used
6343	Currency type code qualifier	C	an..3	R	an..3	**4** **Invoicing currency**
4405	Status description code	C	an..3	N		not used

Remark:

In some countries the invoice amount is always rounded to full currency units. The sum of all line item amounts + charges + taxes does often not equal to this rounded invoice amount. In this case, an adjustment amount might be necessary to explain the difference.

Example:

```
MOA+165:0.26::4'
MOA+165:-0.21::4'
```

Group: **SG50** Status: D Max. Occ.: 2 Total non-taxable/exemption amount

Use this SG50 if zero rate taxes apply.

Segment: **MOA** Seq. No.: 71 Level: 1 **Monetary amount**
Status: M Max. Occ.: 1
Counter: 2210

Name: **Non-taxable or exemption amount**

UN/EDIFACT				Implementation		
	Name	St	Format	St	Format	Use / Remarks
MOA						
C516	Monetary amount	M		M		
5025	Monetary amount type code qualifier	M	an..3	M	an..3	**342** **Non-taxable amount** **403** **Exemption amount**
5004	Monetary amount	C	n..35	R	n..15	Value of a monetary amount subject to tax exemptions. Maximum 2 decimals.
6345	Currency identification code	C	an..3	N		not used
6343	Currency type code qualifier	C	an..3	R	an..3	**4** **Invoicing currency**
4405	Status description code	C	an..3	N		not used

Remark:
Use this segment if the goods or services are exempt or non-taxable according to local legislation.

Example:
```
MOA+342:1000::4'
MOA+403:100::4'
```

Group: **SG52** Status: D Max. Occ.: 10 Tax rates and amounts

SG52 to be used when legally required and/or in agreement between concerned parties.

Segment: **TAX** Seq. No.: 72 Level: 1 **Duty/tax/fee details**
Status: M Max. Occ.: 1
Counter: 2260

Name: **Tax type**

UN/EDIFACT				Implementation		
	Name	St	Format	St	Format	Use / Remarks
TAX						
5283	Duty or tax or fee function code qualifier	M	an..3	M	an..3	Code qualifying the function of a duty or tax or fee. **7 Tax**
C241	Duty/tax/fee type	C		R		
5153	Duty or tax or fee type name code	C	an..3	R	an..3	Code specifying a type of duty, tax or fee. **AAG Harmonised sales tax, Canadian** **AAH Quebec sales tax** **AAI Canadian provincial sales tax** **BOL Stamp duty (Imposta di Bollo)** **GST Goods and services tax** **LOC Local sales tax** **OTH Other taxes** **STT State/provincial sales tax** **VAT Value added tax** Code OTH shall be used when the tax in question is not VAT or another tax code.
C533	Duty/tax/fee account detail	C		N		not used
5289	Duty or tax or fee account code	M	an..6	N		not used
5286	Duty or tax or fee assessment basis quantity	C	an..15	N		not used
C243	Duty/tax/fee detail	C		R		
5279	Duty or tax or fee rate code	C	an..7	N		not used
1131	Code list identification code	C	an..17	N		not used
3055	Code list responsible agency code	C	an..3	N		not used
5278	Duty or tax or fee rate	C	an..17	R	n..7	Rate (percentage) of the specified tax/duty. Maximum 3 decimals. The tax rate (numeric) should be presented as follows: 19.5% ==> 19.5 In case of VAT exemption use 0.0
5305	Duty or tax or fee category code	C	an..3	R	an..3	Code specifying a duty or tax or fee category. **E Exempt from tax** **S Standard rate** **AAA Exempt - Article 146, 148 and 151 of Council Directive 2006/112//EC** **AAC Exempt - Article 138 of Council Directive 2006/112//EC** **AAD Exempt - Article 28c(B)** **AAE Exempt - Article 48, 49 and 50 of Council Directive 2006/112//EC** **AAF Exempt - Article 346 of Council Directive 2006/112//EC** **AAG Exempt - Article 131, 132 and 135 of Council Directive 2006/112//EC** **AAH Margin Scheme - Title XII,Chapter 4 of Council Directive 2006/112//EC** **AAI Margin Scheme - Title XII, Chapter 3 of Council Directive 2006/112//EC** **AAJ Reverse Charge - Article 198 of Council Directive 2006/112//EC** **AAL Reverse Charge Exempt - Articles 154 -164 of Council Directive 2006/112//EC** **AAM Exempt New Means of Transport - Article 2, 3 and 4**

SG52 to be used when legally required and/or in agreement between concerned parties.

UN/EDIFACT				Implementation		
	Name	St	Format	St	Format	Use / Remarks
						of Council Directive 2006/112//EC **AAN** **Exempt Triangulation - Article 141 of Council Directive 2006/112//EC** **AAP** **VAT exempt/reverse charge, within the construction business, Article 199 1 a-b of Council Directive 2006/112//EC** **AAQ** **Reverse Charge – Article 194 of Council Directive 2006/112//EC** Under 6th EU directive, any exemption from tax has to be declared in more detailed. There are several provisions in the directive, which allow exemption. In the European environment it is necessary to state this reason whenever the invoice issuer declares an invoice item or the whole invoice to be VAT exempt. For more Information use guidelines: Reference to Codelist VAT Category code (Tax Exemption Reason Codes list at Volvo IT's EDI homepage).
3446	Party tax identifier	C	an..20	N		not used
1227	Calculation sequence code	C	an..3	N		not used
5307	Tax or duty or fee payment due date code	C	an..3	N		not used

Remark:

When sending a message with data element 5278 in the TAX segment; the tax rate (numeric) should be presented as follows: 19.5% ==> 19.5. In case of VAT exemption use 0.0.

In European business environment, it is recommended to use SG52 as well to summarize line items belonging to the same exemption category. Assuming an invoice with a mixture of line items (1000 EUR) subject to VAT and line items (1000 EUR) subject to tax exemption, the following example would explain the recommendation:
SG50: Total invoice amount (MOA+77) 2160.00 EUR
SG50: Total taxable amount (MOA+125) 1000.00 EUR
SG50: Total tax amount (MOA+176) 160.00 EUR
SG50: Total exemption amt (MOA+403) 1000.00 EUR
SG52: Tax rate and amounts - VAT
SG52: Tax rate and type (TAX+7) 16% VAT
SG52: Taxable amount (MOA+125) 1000.00 EUR
SG52: Tax amount (MOA+124) 160.00 EUR
SG52: Tax rate and amounts - exempt code AAA
SG52: Tax rate and type (TAX+7) 0% AAA (exempt ...)
SG52: Taxable amount (MOA+125) 1000.00 EUR
SG52: Tax amount (MOA+124) 0.00 EUR

Example:

```
TAX+7+VAT+++:::16.0+S'
```

Group: **SG52** Status: D Max. Occ.: 10 Tax rates and amounts

SG52 to be used when legally required and/or in agreement between concerned parties.

Segment: **MOA** Seq. No.: 73 Level: 2 **Monetary amount**
Status: R Max. Occ.: 1
Counter: 2270

Name: **Tax amount in invoice currency**

UN/EDIFACT				Implementation		
	Name	St	Format	St	Format	Use / Remarks
MOA						
C516	Monetary amount	M		M		
5025	Monetary amount type code qualifier	M	an..3	M	an..3	**124** **Tax amount**
5004	Monetary amount	C	n..35	R	n..15	Value of a tax amount in currency units. Maximum 2 decimals.
6345	Currency identification code	C	an..3	N		not used
6343	Currency type code qualifier	C	an..3	R	an..3	**4** **Invoicing currency**
4405	Status description code	C	an..3	N		not used

Remark:

Example:

```
MOA+124:160::4'
```

Group: **SG52** Status: D Max. Occ.: 10 Tax rates and amounts

SG52 to be used when legally required and/or in agreement between concerned parties.

Segment: **MOA** Seq. No.: 74 Level: 2 **Monetary amount**
Status: R Max. Occ.: 1
Counter: 2270

Name: **Taxable amount in invoice currency**

UN/EDIFACT				Implementation		
	Name	St	Format	St	Format	Use / Remarks
MOA						
C516	Monetary amount	M		M		
5025	Monetary amount type code qualifier	M	an..3	M	an..3	**125** **Taxable amount**
5004	Monetary amount	C	n..35	R	n..15	Value of a taxable amount in currency units. Maximum 2 decimals.
6345	Currency identification code	C	an..3	N		not used
6343	Currency type code qualifier	C	an..3	R	an..3	**4** **Invoicing currency**
4405	Status description code	C	an..3	N		not used

Remark:

Example:

```
MOA+125:1000::4'
```

Segment: **UNT**

Seq. No.: 75 Level: 0 **Message trailer**
Status: M Max. Occ.: 1
Counter: 2330

Name: **Message trailer**

UN/EDIFACT				Implementation		
	Name	St	Format	St	Format	Use / Remarks
UNT						
0074	Number of segments in the message	M	n..6	M	n..6	Number of segments in the message
0062	Message reference number	M	an..14	M	an..14	

Remark:

Example:

```
UNT+162+1'
```